CNP

WQ

50Hz
Submersible
Sewage Pump

Stock code:300145

Pumping Water Pumping Honor

CNP
Nanfang Pump Industry Co.,Ltd.

CNP Headquarter
Address:Renhe Town,Hangzhou,China
Post code:311107
Tel:+86 571 88637351,+86 571 86397837
Fax:+86-571-86397809
E-mail:info@cnppump.com
Http://www.cnppump.com

E250506
subject to amendments

Content

New I|II generation submersible sewage pump · · · 1
Product Summary · · · 2
Application · · · 3
Working conditions · · · 3
Definition of model · · · 3
Installation type · · · 4
Coupling device dimensions and pump outlet flange dimension · · · 5
Relevant dimensions · · · 5
Light Coupling device dimensions and pump outlet flange dimension · · · 6
Relevant dimensions · · · 6
WQ(II) type submersible sewage pump(2-pole motor) · · · 7
WQ(I) type submersible sewage pump(4-pole motor) · · · 8
WQ(I) type submersible sewage pump(4,6,8-pole motor) · · · 9
WQ(I) type submersible sewage pump(4,6-pole motor) · · · 10
WQ(I|II) type submersible sewage pump(2-pole motor hot temperature pump) · · · 11
WQ(I) type submersible sewage pump(Introduction of high-resistance pump) · · · 12
Technical data and dimensions(2-pole motor) · · · 13
Technical data and dimensions(4,6,8-pole motor) · · · 14
Technical data and dimensions(2-pole single phase motor) · · · 16
Technical data and dimensions(4,6-pole 90-150kW motor) · · · 16
Performance curve · · · 17
WQ-JY(I) type submersible sewage pump · · · 28
Technical data and dimensions · · · 29
Performance curve · · · 31
WQ-QG(I) cutting type submersible sewage pump · · · 34
Technical data and dimensions · · · 35
Performance curve · · · 36
WQ-W(I) non-clogging cutting type submersible sewage pump · · · 37
Technical data and dimensions · · · 38
Performance curve · · · 39
WQ-X(I) series vortex type submersible sewage pump · · · 42
Technical data and dimensions · · · 43
Performance curve · · · 43

Content

WQ-H(I) high head large solid passing submersible pump · · · · · 44
Technical data and dimensions · · · · · 45
Performance curve · · · · · 45
SHP type submersible sewage pump · · · · · 46
Technical data and dimensions · · · · · 47
Performance curve · · · · · 47
Coupling installation and pump outlet flange dimension · · · · · 48
Relevant dimensions · · · · · 48
Installation methods of small-flow high-head pump · · · · · 49
Table of pump models and oil capacities · · · · · 50
Summary · · · · · 50
Product features · · · · · 50
Operation condition and installation condition · · · · · 51
Power requirement · · · · · 51
Definition of model · · · · · 51
Supply range · · · · · 51
Ordering Instructions · · · · · 51

New I|II generation submersible sewage pump

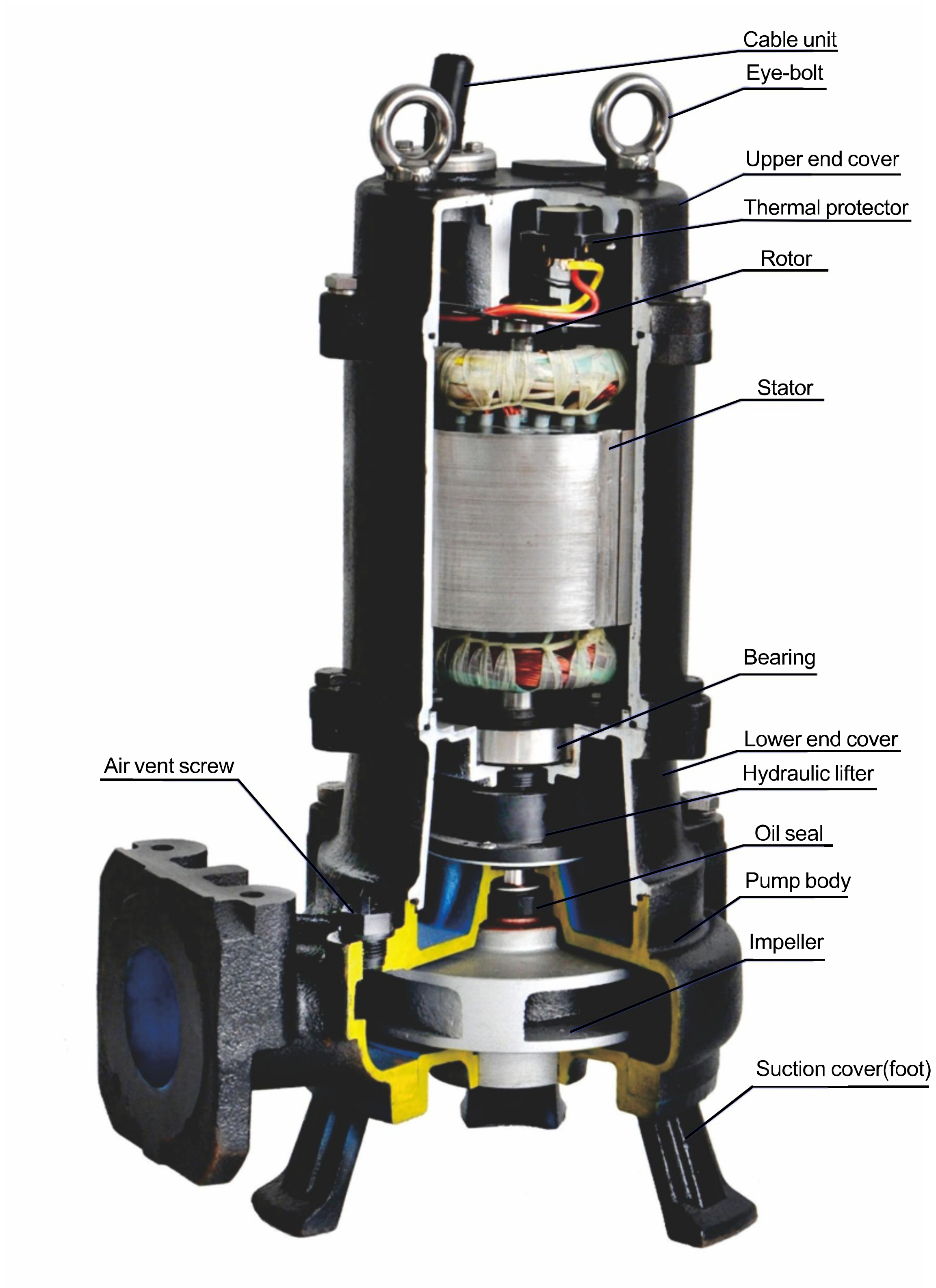

Product Summary

WQ(I) series new I|II generation submersible sewage pump has the following features:

1. The special cable production process can prevent water leak to motor cabinet when cable cover is broken or the front of cable is submersed.

2. Specially designed submersible motor with the protection level of IPX8, insulation class F. The a lowed temperature rise is high, submerged cooling effect is good, the actual temperature rise is low, motor insulation life is long, it ensures that the motor can automatically cut off the power supply in abnormal condition.

3. The product is fitted with outside frame works oil seal and double-mechanical seal. The hydraulic lifter which is installed inside oil chamber ensures the lubrication of mechanical seal when the oi level is low. Prolong the service life of the seal, the sealing performance is more reliable, effectively ensuring the continuous safe operation of product. (This kind of technology is a patent of Tsurumi Pump)

4. An automatic air release valve is designed at the pump outlet, eliminating the need for tedious manual venting. During operation, the pump can automatically discharge internal air to ensure normal water discharge, effectively preventing operational failures caused by air accumulation in the pump.

5. The impeller adopts semi-closed and open shape of double-channel design. Because of symmetric channel, it is well balanced, stable running, small vibration, long service life and energy saving.

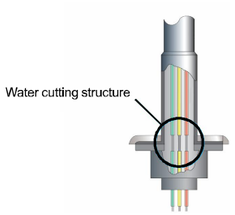

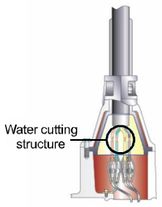

Under 4kW Above 5.5KW

Under 7.5kW Above 11KW

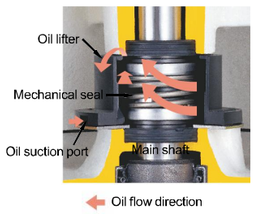

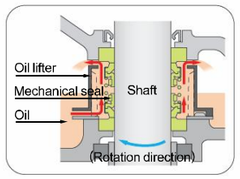

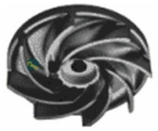

Application

- Sewage water treatment system for construction, industrial enterprises, municipal projects, etc.
- Drainage, waste water treatment for city environmental protection system.
- Prospecting, mining, etc.
- Irrigation, fen, aquaculture, fountain, etc.

Working conditions

- Power Supply: 50Hz, 3x380V;
- Medium temperature shall less than 40℃, pH value is between 4 to 10. Medium density shall less than 1200kg/m^3, solid and liquid ratio shall less than 2%.
- The lowest liquid level shall in conform to the lowest liquid in the size dimension.
- The pump is not suitable for strong corrosive fluids or strong corrosive solid.
- The so id diameter in the medium shall not exceed the maximum allowed solid diameter.

Definition of model

80 WQ D X 40-15-4 W H JY QG-2P (I|II)

- (I|II): New I|II generation product
- 2P: Motor pole(omitted for 2-pole, marked for 4,6,8-pole)
- QG: Cutting type(omitted for non cutting type)
- JY: Agitator type(omitted for non agitator type)
- H: High head type(omitted for non high-head type)
- W: Non-clogging cutting type(omitted for non-clogging cutting type)
- 4: Power(kW)
- 15: Rated head(m)
- 40: Rated flow(m^3/h)
- X: Vortex type(omitted for non Vortex type)
- D: Single phase(omitted for non single-phase type)
- WQ: Submersible sewage pump
- 80: Tubing diameter(mm)

Installation type

Fixed auto coupling device installation

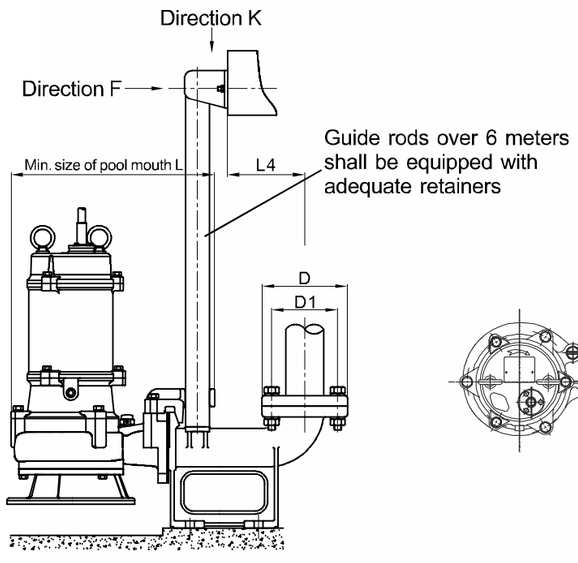

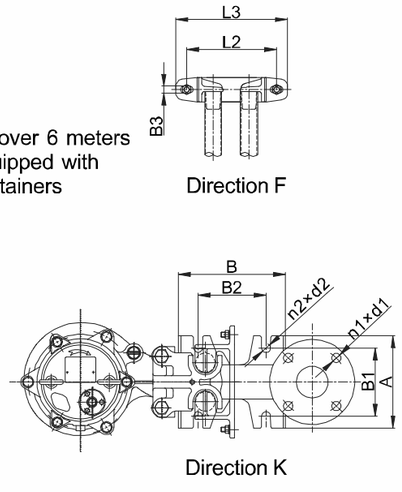

Movable installation

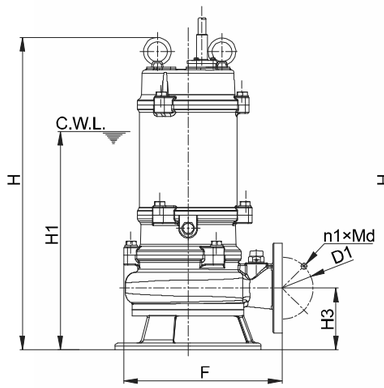

Hard pipe movable installation

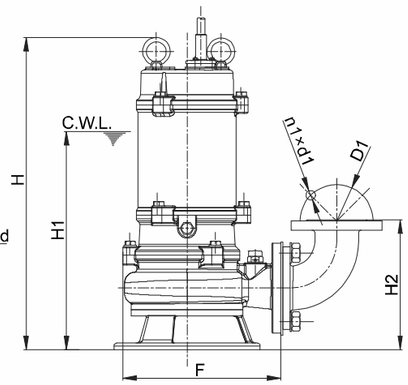

Hard pipe movable installation with flange joint

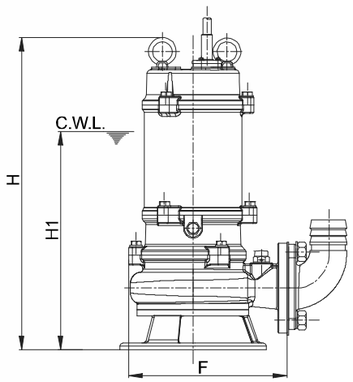

Soft pipe movable installation

※C.W.L: The lowest water level when continuous operating.

Coupling device dimensions and pump outlet flange dimension

(refer to page 4 for size remark details)

Measure:mm

No.	Diameter	Flange connection size				Coupling base dimension						L	L1	L2	L3	L4
		D	D1	n1×d1	n1×Md	A	B	B1	B2	B3	n2×d2					
1	DN40	130	100	4-Ø14	4-M12	140	149	100	95	2-Ø14	4-Ø18	400	73	185	230	57
2	DN50	140	110	4-Ø14	4-M12	160	200	120	120	2-Ø14	4-Ø18	400	60	185	230	175
3	DN65	160	130	4-Ø14	4-M12	190	220	140	140	2-Ø14	4-Ø18	415	75	195	230	130
4	DN80	190	150	4-Ø18	4-M16	220	250	170	170	2-Ø14	4-Ø18	415	75	195	230	165
5	DN100	210	170	4-Ø18	4-M16	250	290	200	200	2-Ø15	4-Ø18	480	114	245	300	176
6	DN150 (TOS150)	265	225	8-Ø18	8-M16	400	410	300	300	3-Ø15	4-Ø24	925	190	260	380	190
7	DN150 (TO150)	265	225	8-Ø19	8-M16	400	410	300	300	3-Ø15	4-Ø24	1048	220	260	380	160
8	DN200	320	280	8-Ø19	8-M16	400	450	300	350	3-Ø15	4-Ø24	1048	200	260	380	229
9	DN250	375	335	12-Ø19	12-M16	460	560	360	430	3-Ø15	4-Ø24	1078	200	280	380	300
10	DN300	440	395	12-Ø23	12-M20	600	630	500	470	3-Ø18	4-Ø28	1205	270	400	700	300
11	DN350	490	445	12-Ø23	12-M20	640	650	520	470	4-Ø23	4-Ø28	1267	270	400	700	330
12	DN400	565	515	16-Ø26	16-M24	750	960	600	650	4-Ø23	4-Ø35	1387	280	840	930	650
13	DN500	675	620	20-Ø26	20-M24	1000	1100	800	800	4-Ø23	4-Ø42	1872	290	990	1100	601

※When coupling installed, foot bracket is not included in coupling installation for 2-pole, 5.5KW cutting type pump, and other 4-pole pumps with motor power of 4kW and above.

Flange pressure is PN1.0MPa for DN400&Dn500. For all other sizes, the pressure is PN0.6MPa.

Relevant dimensions

Measure: mm(except for inch)

Item \ Diameter	DN40	DN50	DN65	DN80	DN100 TOS-100	DN100 TOS-100F	DN150 (TOS150)	DN150 (TO150)	DN200	DN250	DN300	DN350	DN400	DN500
Guide rod size	1"/33×3.0 DN25		1.25"/42×3.0 DN32		2"/60×3.25 DN50			1.5"/48×3.25 DN40			2.5"/75×4 DN65		4"/114×4 DN100	
Guide rod length	pool depth 245	pool depth 285	pool depth 300	pool depth 320	pool depth 365		pool depth 100				pool depth 150	pool depth 70	pool depth 870	pool depth 1120
Quantity of expansion bolt and specification	2-M10×120				2-M12×125					2-M12×125	2-M16×150	3-M16×150	4-M20×200	
Quantity of bolt and specification	4-M16×250						4-M20×300				4-M24×350	4-M24×350	4-M30×400	4-M39×400
Footer bolt hole size	80×80×300						100×100×350			120×120×400	120×120×400	120×120×400	150×150×450	
Dia.of soft pipe (using scope)	DN40	DN50	DN65	DN80	DN100 using scope 2.2~15kW	DN100 using scope 18.5~22kW	DN150 using scope ≤22kW	DN150 using scope ≥30kW	DN200	DN250	DN300	DN350	DN400	DN500

Light Coupling device dimensions and pump outlet flange dimension

(refer to page 4 for size remark details)

(fit for 6P/8P-22-75kW, DN350-500 pump)

Measure:mm

No.	Diameter	Flange connection size				Coupling base dimension						L	L1	L2	L3	L4
		D	D1	n1×d1	n1×Md	A	B	B1	B2	B3	n2×d2					
1	DN350	510	445	12-Ø22	12-M20	588	617	420	402	3-Ø16	4-Ø26	1252	173	325	500	321
2	DN400	565	515	16-Ø26	16-M24	618	663	490	510	3-Ø16	4-Ø26	1240	187	325	500	368
3	DN500	673	620	20-Ø26	20-M24	743	751	570	550	3-Ø20	4-Ø34	1800	200	660	745	449

Foot bracket is not included in coupling installation for DN350-DN500 pump.
Pressure grade is PN0.6MPa for DN350 flange, and PN1.0MPa for DN400 and DN500 flange.

Relevant dimensions

Measure: mm(except for inch)

Item \ Diameter	DN350	DN400	DN500
Guide rod size	2"/60×3.25 DN50	2"/60×3.25 DN50	2.5"/75×4 DN65
Guide rod length	pool depth-715	pool depth-815	pool depth-918
Quantity of expansion bolt and specification	3-M14×150	3-M14×150	3-M18×200
Quantity of bolt and specification	4-M24×350	4-M24×350	4-M30×400
Footer bolt hole size	120×120×400	120×120×400	150×150×450
Dia.of soft pipe (using scope)	DN350	DN400	DN500

Please consult pre-sales technician for specific model and its installation drawing.

WQ(II) type submersible sewage pump

Sectional drawing of sewage pump with 2-pole motor

WQ(II)type

0.55~15kW

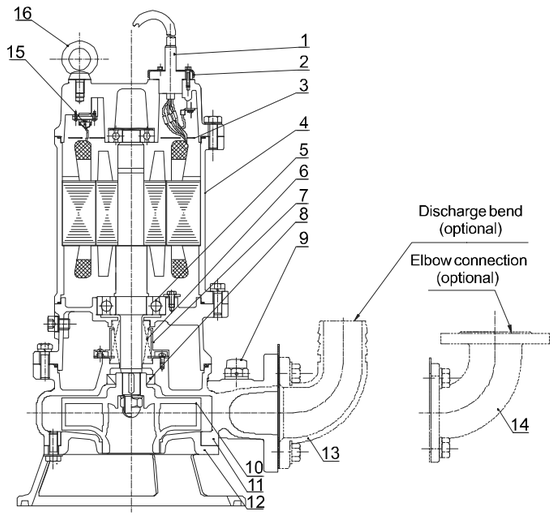

No.	Name	Material
1	Cable	YZW
2	Cable gland	/
3	Threading board	/
4	Electric motor	/
5	Bearing	/
6	Mechanical seal	Graphite/SIC SIC/SIC+C
7	Oil lifter	/
8	Oil seal	NBR1-2
9	Air vent screw	Resin/others
10	Impeller	HT200
11	Casing	HT200
12	Suction cover	Cast iron
13	Discharge bend (optional)	50-100(Engineering plastic) 32-300(HT200)
14	Elbow connection (optional)	HT200
15	Thermal protector	/
16	Eye-bolt	/

WQ(I) type submersible sewage pump

Sectional drawing of sewage pump with 4-pole motor

WQ(I)type 2.2~15kW

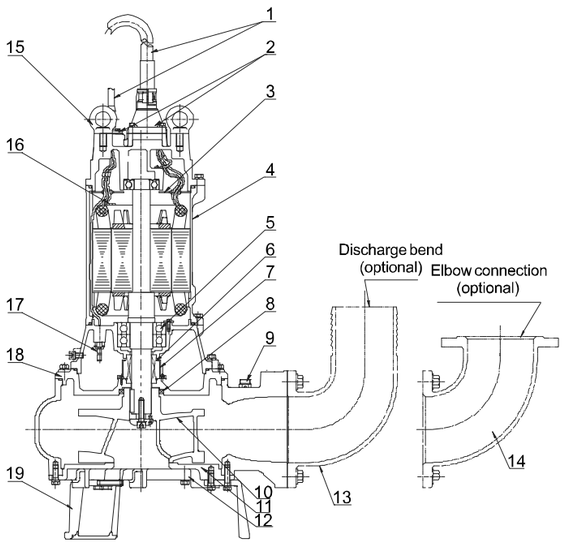

No.	Name	Material
1	Cable	YZW
2	Cable gland	/
3	Threading board	/
4	Electric motor	/
5	Bearing	/
6	Mechanical seal	Graphite/SIC SIC/SIC+C
7	Oil lifter	/
8	Oil seal	NBR1-2
9	Air vent screw	Resin/others
10	Impeller	HT200
11	Casing	HT200
12	Suction cover	HT200
13	Discharge bend (optional)	50-100(Engineering plastic) 32-300(HT200)
14	Elbow connection (optional)	HT200
15	Eye-bolt	/
16	Thermal protector	/
17	Leak sensor electrode bar (above 11kw)	/
18	Casing top cover	HT200
19	Foot support	Cast iron

WQ(I) type submersible sewage pump

Sectional drawing of sewage pump with 4,6,8-pole motor

WQ(I)type

4-pole 18.5-45kW
6-pole 22-37kW
8-pole 22kW

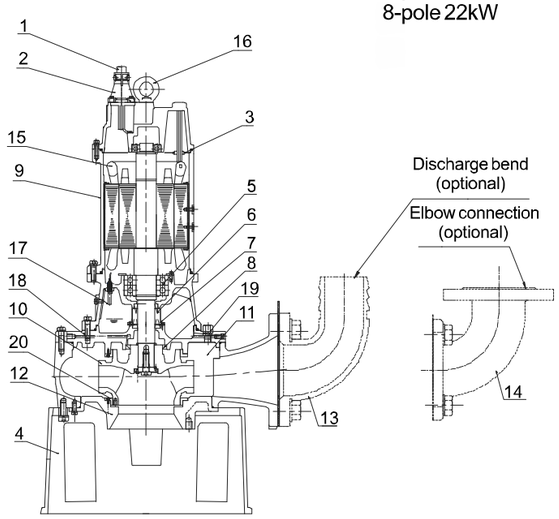

WQ(I)type

4-pole 55-75kW
6-pole 45-75kW

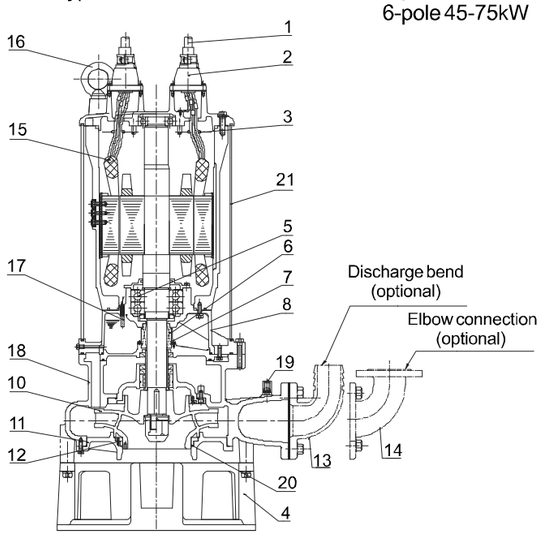

No.	Name	Material
1	Cable	YCW
2	Cable gland	HT200
3	Threading board	Q235
4	Filter bracket	QT600
5	Bearing	/
6	Mechanical seal	Graphite/SIC SIC/SIC+C
7	Oil lifter	/
8	Oil seal	NBR1-2
9	Base	HT200
10	Impeller	HT200
11	Casing	HT200
12	Suction cover	HT200
13	Discharge bend (optional)	HT200
14	Discharge bend (optional)	HT200
15	Mini-thermal protector	/
16	Eye-bolt	45#Galvanized
17	Leak sensor electrode bar (above 11kw)	/
18	Casing top cover	HT200
19	Air vent nut	304
20	Neck ring	HT200
21	Water isolation cover	Q235

WQ(I) type submersible sewage pump

Sectional drawing of submersible pump with 4,6-pole motor

WQ(I)type 90kW~150kW

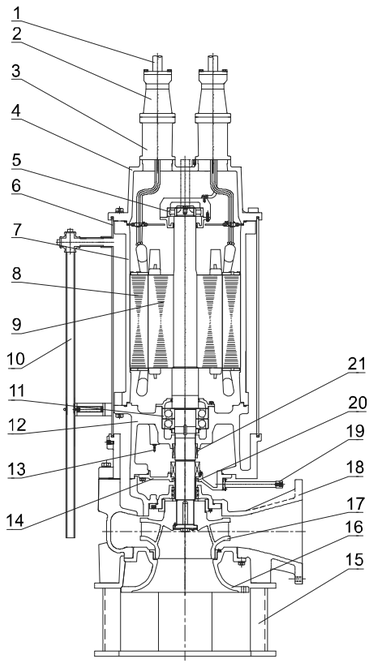

No.	Name	Material
1	Cable	YZW
2	Cable guard	HT200
3	Junction box	HT200
4	Uppercover	HT200
5	Upperbearing	Imported NSK
6	Water-resisting cover	Q235
7	Base	HT200
8	Stator with wire	/
9	Rotor with shaft	/
10	Cooling water pipe	304
11	Lower bearing	Imported NSK
12	Lower cover	HT200
13	Leak sensor electrode bar	/
14	Casing top cover	HT200
15	Foot support	Q235
16	Suction cover	HT200
17	Impeller	HT200
18	Pump body	HT200
19	Oil drain pipe	304
20	Framework seal	NBR1-2
21	Mechanical seal	Imported from Japan

WQ(I|II) type submersible sewage pump

Sectional drawing of 2-pole motor hot temperature pump(medium temperature:40-80℃)

WQ(I)type
WQ(II)type 0.37kW~15kW

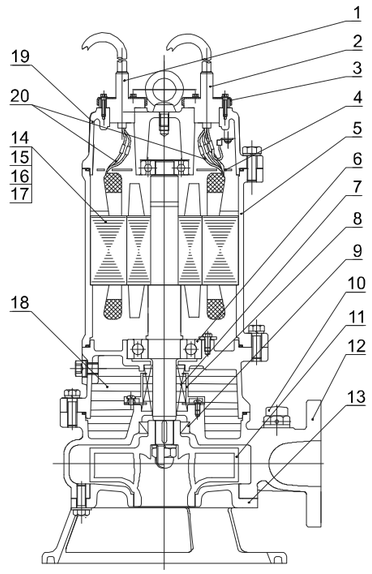

All pumps with 2-pole motor can be referred.

No.	Name	Material
1	Signal cable	Rubber submersible cable
2	Main cable	Rubber submersible cable
3	Cable guard	/
4	Threading board	/
5	Motor	/
6	Bearing	Special high temperature bearing
7	Mechanical seal	Customized specialhigh temperature mechanical sea
8	Oil lifter	/
9	Framework seal	Fluorine rubber
10	Air vent screw	Resin
11	Impeller	HT200
12	Pump body	HT200
13	Inlet cover	HT200
14	Varnished wire	High-temperature resistant varnished wire
15	Slot wedge	High-temperature resistant slot wedge
16	Thermal protector	High-temperature resistant micro thermal protector
17	Insulation paper	High-temperature Resistant insulation paper
18	Lubrication oil	46#Turbine oil
19	Top cover (LB processing)	HT200
20	Fixture wire	High-temperature resistant fixture wire

WQ(I) type submersible sewage pump

Introduction of high-resistance pump

1. Wear-resisting pump

The structure adopts several framework seal rings to prevent sediment and other things from entering the pump interior. Wear-resistant material is used to increase the strength and hardness of the pump.

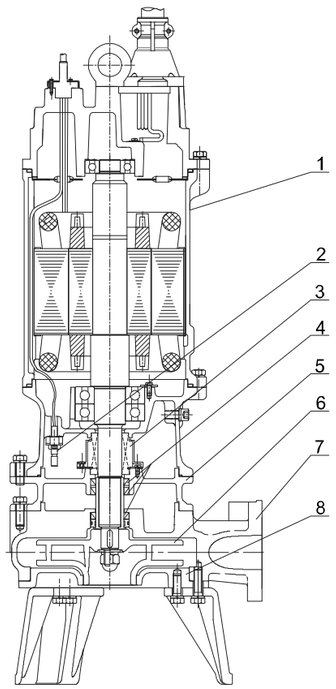

Present models:65WQ40-50-11(I)
150WQ150-24-18.5(I)

No.	Name	Material
1	Motor	/
2	Immersed electrode	/
3	Mechanical seal	Customized wear-resistant mechanical seal
4	Framework seal	NBR
5	Casing top cover	Wear-resistant material
6	Impeller	Wear-resistant material
7	Pump body	Wear-resistant material
8	Inlet cove	Wear-resistant material

2. Stainless steel impeller pump

Compared with cast iron impeller, 304 impeller cast by low temperature wax casting aluminum abrasive tools has the characteristics of corrosion resistance and higher efficiency, which can be applied to some corrosion-resistant medium places.

Technical data and dimensions(2-pole motor)

WQ(II) type submersible sewage pump

Model	Dia.	Q	H	Speed	Power	Rated voltage	Rated current	Max. Dia. of passing solid	Weight	Dimensions(mm)					Coupling
	(mm)	(m^3/h)	(m)	(rpm)	(kw)	(V)	(A)	(mm)	(kg)	H	H1	H2	H3	F	
40WQ10-7-0.55(II)	40	10	7	2850	0.55	380	1.3	20	21	432	319	187	97	238	TOS40
50WQ10-7-0.55(II)	50	10	7	2850	0.55	380	1.3	20	21	432	319	207	97	238	TOS50
40WQ12-10-0.75(II)	40	12	10	2850	0.75	380	1.8	20	22.5	432	319	187	97	238	TOS40
50WQ12-10-0.75(II)	50	12	10	2850	0.75	380	1.8	20	22.5	432	319	207	97	238	TOS50
40WQ15-13-1.1(II)	40	15	13	2850	1.1	380	2.6	20	24	432	319	187	97	238	TOS40
50WQ8-16-1.1(II)	50	8	16	2850	1.1	380	2.6	20	26.5	440	348	214	104	265	TOS50
65WQ25-8-1.1(II)	65	25	8	2850	1.1	380	2.6	25	29	443	351	226	106	261	TOS65
40WQ12-18-1.5(II)	40	12	18	2880	1.5	380	3.3	20	32	472	357	195	105	275	TOS40
50WQ12-18-1.5(II)	50	12	18	2880	1.5	380	3.3	20	32	472	357	215	105	275	TOS50
65WQ25-10-1.5(II)	65	25	10	2880	1.5	380	3.3	25	33	481	366	231	111	286	TOS65
50WQ15-20-2.2(II)	50	15	20	2880	2.2	380	4.6	20	38	511	402	217	107	279	TOS50
65WQ25-15-2.2(II)	65	25	15	2880	2.2	380	4.6	25	41	522	414	230	110	287	TOS65
80WQ40-10-2.2(II)	80	40	10	2880	2.2	380	4.6	25	43	545	436	256	121	296	TOS80
100WQ50-9-2.2(II)	100	50	9	2880	2.2	380	4.6	30	42	545	436	271	121	323	TOS100
50WQ15-25-3(II)	50	15	25	2840	3	380	6.1	25	45	521	412	218	108	294	TOS50
50WQ25-20-3(II)	50	25	20	2840	3	380	6.1	25	45	521	412	218	108	294	TOS50
65WQ25-18-3(II)	65	25	18	2840	3	380	6.1	25	48	523	415	227	107	291	TOS65
80WQ35-13-3(II)	80	35	13	2840	3	380	6.1	35	49	546	437	256	121	300	TOS80
100WQ60-9-3(II)	100	60	9	2840	3	380	6.1	35	50	546	437	271	121	314	TOS100
50WQ15-33-4(II)	50	15	33	2840	4	380	7.7	20	51	554	438	220	110	338	TOS50
65WQ20-25-4(II)	65	20	25	2840	4	380	7.7	25	52.5	563	447	235	115	336	TOS65
80WQ40-19-4(II)	80	40	19	2840	4	380	7.7	30	54.5	570	454	253	118	340	TOS80
100WQ100-9-4(II)	100	100	9	2840	4	380	7.7	35	57	590	474	284	134	349	TOS100
50WQ20-40-5.5(II)	50	20	40	2940	5.5	380	10.8	20	78.5	666	528	232	122	360	TOS50
65WQ25-31-5.5(II)	65	25	31	2940	5.5	380	10.8	25	83.5	675	537	244	124	370	TOS65
80WQ40-24-5.5(II)	80	40	24	2940	5.5	380	10.8	30	82.5	687	549	266	131	360	TOS80
100WQ65-15-5.5(II)	100	65	15	2940	5.5	380	10.8	35	81	702	565	295	145	354	TOS100
150WQ100-11-5.5(II)	150	100	11	2940	5.5	380	10.8	40	97	717	579	364	154	426	TOS150
50WQ20-46-7.5(II)	50	20	46	2940	7.5	380	14.3	20	96	811	567	234	124	360	TOS50
65WQ25-39-7.5(II)	65	25	39	2940	7.5	380	14.3	25	97	807	563	244	124	370	TOS65
80WQ40-31-7.5(II)	80	40	31	2940	7.5	380	14.3	30	96	819	575	266	131	360	TOS80
100WQ65-20-7.5(II)	100	65	20	2940	7.5	380	14.3	35	98	832	588	297	147	390	TOS100
150WQ100-17-7.5(II)	150	100	17	2940	7.5	380	14.3	40	110.5	849	605	364	154	426	TOS150
65WQ40-44-11(II)	65	40	44	2930	11	380	21.7	30	130.5	927	645	316	196	377	TOS65
80WQ70-33-11(II)	80	70	33	2930	11	380	21.7	35	130	934	652	337	202	399	TOS80
100WQ90-29-11(II)	100	90	29	2930	11	380	21.7	35	130.5	938	656	355	205	413	TOS100
65WQ50-53-15(II)	65	50	53	2930	15	380	29.1	30	138.5	927	670	316	196	377	TOS65
80WQ80-40-15(II)	80	80	40	2930	15	380	29.1	35	139	934	677	337	202	399	TOS80
100WQ100-33-15(II)	100	100	33	2930	15	380	29.1	35	138.5	938	681	355	205	413	TOS100

Technical data and dimensions(4,6,8-pole motor)

WQ(I) type submersible sewage pump

Model	Dia.	Q	H	Speed	Power	Rated voltage	Rated current	Max.Dia. of passing solid	Weight	Dimensions(mm)					Coupling
	(mm)	(m^3/h)	(m)	(rpm)	(kw)	(V)	(A)	(mm)	(kg)	H	H1	H2	F	H3	
80WQ36-10-2.2-4(I)	80	36	10	1413	2.2	380	5	50	56	643	460	301	363	168.5	TOS80
80WQ36-16-4-4(I)	80	36	16	1413	4	380	8.4	35	67	692	555	301	375	168.5	TOS80
80WQ60-11-4-4(I)	80	60	11	1413	4	380	8.4	55	67	716	357	250	370	173.5	TOS80
100WQ60-17-5.5-4(I)	100	60	17	1437	5.5	380	11.5	40	132	908	670	432	453	222	TOS100
100WQ60-20-7.5-4(I)	100	60	20	1450	7.5	380	16.6	40	145	929	690	369	454	222	TOS100
100WQ80-35-18.5-4(I)	100	80	35	1460	18.5	380	36.9	27.5	305	1208	800	439	603	289	TOS100F
100WQ100-35-22-4(I)	100	100	35	1460	22	380	43.1	35	310	1208	800	439	603	289	TOS100F
100WQ100-39-22-4(I)	100	100	39	1460	22	380	43.1	35	310	1208	800	439	603	289	TOS100F
150WQ200-5-5.5-4(I)	150	200	5	1460	5.5	380	11.5	70	156	1064	825	545	548	335	TOS150
150WQ240-7-7.5-4(I)	150	240	7	1450	7.5	380	16.6	70	156	1085	845	510	548	335	TOS150
150WQ150-16-11-4(I)	150	150	16	1440	11	380	22.9	52	216	1097	750	535	575	325	TOS150
150WQ150-20-15-4(I)	150	150	20	1440	15	380	30.6	57	237	1167	800	535	572	325	TOS150
150WQ150-24-18.5-4(I)	150	150	24	1460	18.5	380	36.9	45	292	1281	1030	530	620	320	TOS150
150WQ180-20-18.5-4(I)	150	180	20	1460	18.5	380	36.9	45	292	1281	1030	530	620	320	TOS150
150WQ250-15-18.5-4(I)	150	250	15	1460	18.5	380	36.9	45	292	1281	1030	530	620	320	TOS150
150WQ150-27-22-4(I)	150	150	27	1460	22	380	43.1	60	320	1281	880	530	575	320	TOS150
150WQ180-25-22-4(I)	150	180	25	1460	22	380	43.1	65	320	1281	880	530	575	320	TOS150
150WQ200-22-22-4(I)	150	200	22	1460	22	380	43.1	60	320	1281	880	530	575	320	TOS150
150WQ270-16-22-4(I)	150	270	16	1460	22	380	43.1	65	320	1273	860	530	575	320.5	TOS150
150WQ200-28-30-4(I)	150	200	28	1450	30	380	57.4	60	450	1513	1200	673	620	350	TO150
150WQ150-35-37-4(I)	150	150	35	1470	37	380	71.9	65	485	1567	1200	671	765	461	TO150
150WQ200-35-37-4(I)	150	200	35	1470	37	380	71.9	65	485	1567	1200	671	765	350	TO150
150WQ200-45-55-4(I)	150	200	45	1480	55	380	106.0	50	840	1663	1300	596	811	386.5	TO150
150WQ270-40-55-4(I)	150	270	40	1480	55	380	106.0	50	840	1663	1300	596	811	386.5	TO150
200WQ270-10-11-4(I)	200	270	10	1440	11	380	22.9	50	230	1113	760	530	568	335	TO200
200WQ270-14-15-4(I)	200	270	14	1440	15	380	30.6	35	255	1184	810	535	546	340	TO200
200WQ250-15-18.5-4(I)	200	250	15	1460	18.5	380	36.9	35	310	1281	880	530	575	335.5	TO200
200WQ300-12-18.5-4(I)	200	300	12	1460	18.5	380	36.9	63	310	1281	880	530	575	335.5	TO200
200WQ270-16-22-4(I)	200	270	16	1460	22	380	43.1	64	323	1281	880	530	575	335.5	TO200
200WQ300-15-22-4(I)	200	300	15	1450	22	380	43.1	60	323	1281	880	530	575	335.5	TO200
200WQ400-10-22-4(I)	200	400	10	1450	22	380	43.1	65	323	1281	880	530	575	335.5	TO200
200WQ250-22-30-4(I)	200	250	22	1450	30	380	57.4	60	565	1513	1200	673	620	463	TO200
200WQ360-17-30-4(I)	200	360	17	1450	30	380	57.4	65	565	1513	1200	673	620	463	TO200
200WQ400-15-30-4(I)	200	400	15	1450	30	380	57.4	60	565	1513	1200	673	620	463	TO200
200WQ400-22-37-4(I)	200	400	22	1470	37	380	71.9	65	580	1590	1200	673	813	463	TO200
200WQ350-25-37-4(I)	200	350	25	1470	37	380	71.9	60	580	1590	1200	673	813	463	TO200
200WQ300-26-37-4(I)	200	300	26	1470	37	380	71.9	50	580	1590	1200	673	813	463	TO200
200WQ270-28-37-4(I)	200	270	28	1470	37	380	71.9	50	580	1590	1200	673	813	463	TO200
200WQ400-25-45-4(I)	200	400	25	1470	45	380	87.0	40	650	1663	1300	650	811	432.5	TO200
200WQ250-40-55-4(I)	200	250	40	1480	55	380	106.0	40	850	1663	1300	650	811	386	TO200
200WQ400-30-55-4(I)	200	400	30	1480	55	380	106.0	40	850	1663	1300	650	811	386	TO200

Technical data and dimensions(4,6,8-pole motor)

WQ(I) type submersible sewage pump

Model	Dia.	Q	H	Speed	Power	Rated voltage	Rated current	Max.Dia. of passing solid	Weight	Dimensions(mm)					Coupling
	(mm)	(m^3/h)	(m)	(rpm)	(kw)	(V)	(A)	(mm)	(kg)	H	H1	H2	F	H3	
200WQ350-40-75-4(I)	200	350	40	1480	75	380	142.0	40	919	1663	1300	650	811	386	TO200
200WQ500-30-75-4(I)	200	500	30	1480	75	380	142.0	40	865	1663	1300	650	811	386	TO200
250WQ400-15-30-4(I)	250	400	15	1460	30	380	57.4	45	485	1517	1250	750	815	490	TO250
250WQ600-9-30-4(I)	250	600	9	1460	30	380	57.4	45	485	1517	1250	750	815	490	TO250
250WQ360-20-30-4(I)	250	360	20	1460	30	380	57.4	45	485	1517	1250	750	815	490	TO250
250WQ420-22-37-4(I)	250	420	22	1470	37	380	71.9	62	550	1594	1200	750	820	490	TO250
250WQ600-12-37-4(I)	250	600	12	1470	37	380	71.9	62	550	1594	1200	750	820	490	TO250
250WQ360-28-45-4(I)	250	360	28	1470	45	380	87.0	45	685	1556	1200	695	829	432.5	TO250
250WQ600-20-55-4(I)	250	600	20	1450	55	380	106	60	865	1663	1300	740	900	430	TO250
250WQ600-28-75-4(I)	250	600	28	1480	75	380	142.0	60	930	1663	1300	740	895	430	TO250
300WQ800-8-37-4(I)	300	800	8	1450	37	380	75.0	60	620	1400	1150	779	800	514	TO300
300WQ500-15-37-4(I)	300	500	15	1450	37	380	75.0	60	620	1400	1150	779	800	514	TO300
300WQ600-18-45-4(I)	300	600	18	1470	45	380	87.0	60	690	1605	1250	825	881	514	TO300
300WQ800-12-45-4(I)	300	800	12	1470	45	380	87.0	60	690	1605	1250	825	881	514	TO300
300WQ600-20-55-4(I)	300	600	20	1450	55	380	106.0	55	865	1680	1120	775	870	466.5	TO300
300WQ800-20-75-4(I)	300	800	20	1450	75	380	142.0	60	956	1680	1120	775	870	466.5	TO300
250WQ600-10-22-6(I)	250	600	10	983	22	380	45	85	649	1654	1300	744	830	484	TO250
300WQ700-8-22-6(I)	300	700	8	983	22	380	45	66	658	1663	1300	802	830	492	TO300
300WQ800-9-30-6(I)	300	800	9	983	30	380	60	66	700	1663	1300	802	830	492	TO300
300WQ800-11-37-6(I)	300	800	11	983	37	380	74	50	729	1663	1300	802	830	492	TO300
300WQ900-13-45-6(I)	300	900	13	983	45	380	84	90	1039	1772	1470	772	878	462	TO300
300WQ900-16-55-6(I)	300	900	16	983	55	380	109	100	1093	1772	1470	772	878	462	TO300
350WQ960-5.5-22-8(I)	350	960	5.5	734	22	380	50	105	750	1703	1300	891	880	525	TO350*
350WQ960-7-30-6(I)	350	960	7	983	30	380	60	100	741	1703	1300	891	880	525	TO350*
350WQ1100-8-37-6(I)	350	1100	8	983	37	380	74	115	769	1703	1300	891	880	525	TO350*
400WQ1200-16-75-6(I)	400	1200	16	983	75	380	138	100	1206	1817	1500	983	888	507	TO400*
400WQ1600-6.5-45-6(I)	400	1600	6.5	983	45	380	84	125	1043	1793	1490	938	887	472	TO400*
400WQ1600-9-55-6(I)	400	1600	9	983	55	380	109	105	1072	1793	1490	938	887	472	TO400*
500WQ2000-9-75-6(I)	500	2000	9	983	75	380	138	120	1522	1926	1550	1153	1372	635	TO500*

※ For specific dimension, please contact sales for relevant outline dimension drawing.

* means that light coupling device can be adopted.

Technical data and dimensions(2-pole single phase motor)

WQ(I) type submersible sewage pump

Model	Dia.	Q	H	Speed	Power	Rated voltage	Rated current	Max.Dia. of passing solid	Weight	Dimensions(mm)					Coupling
	(mm)	(m^3/h)	(m)	(rpm)	(kw)	(V)	(A)	(mm)	(kg)	H	H1	H2	F	H3	
40WQD12-10-0.75(I)	40	12	10	2875	0.75	220	4.4	15	23.5	486	320	183	238	93	TOS40
40WQD12-18-1.5(I)	40	12	18	2875	1.5	220	8.7	20	41	598	380	195	275	105	TOS40
50WQD12-10-0.75(I)	50	12	10	2875	0.75	220	4.4	15	23.5	486	320	203	238	93	TOS50
50WQD12-18-1.5(I)	50	12	18	2875	1.5	220	8.7	20	41	598	380	215	275	105	TOS50
50WQD15-15-1.5(I)	50	15	15	2875	1.5	220	8.7	20	41	602	385	217	278	107	TOS50
50WQD15-18-2.2(I)	50	15	18	2871	2.2	220	12.5	22	44.5	614	420	217	279	107	TOS50
50WQD15-20-2.2(I)	50	15	20	2871	2.2	220	12.5	22	44.5	614	420	217	279	107	TOS50
65WQD25-10-1.5(I)	65	25	10	2875	1.5	220	8.7	28	37	607	390	230	286	110	TOS65
65WQD25-14-2.2(I)	65	25	14	2871	2.2	220	12.5	28	47	630	436	236	290	116	TOS65
80WQD40-8-2.2(I)	80	40	8	2871	2.2	220	12.5	26.5	42.5	648	454	255	296	121	TOS80
100WQD50-7-2.2(I)	100	50	7	2871	2.2	220	12.5	45	43	648	454	271	323	121	TOS100

Technical data and dimensions(4,6-pole 90-150kW motor)

WQ(I) type submersible sewage pump

Model	Dia.	Q	H	Speed	Power	Rated voltage	Rated current	Max.Dia. of passing solid	Weight	Dimensions(mm)					Coupling
	(mm)	(m^3/h)	(m)	(rpm)	(kw)	(V)	(A)	(mm)	(kg)	H	H1	H2	F	H3	
350WQ900-26-90-4(I)	350	900	26	1472	90	380	179	65	2300	2560	1984	907	1111	585	TO350
350WQ900-29-110-4(I)	350	900	29	1473	110	380	210	65	2430	2560	1984	907	1111	585	TO350
350WQ1200-29-132-4(I)	350	1200	29	1471	132	380	252	65	2500	2570	1994	907	1111	585	TO350
350WQ1200-33-150-4(I)	350	1200	33	1490	150	380	284	65	2665	2570	1994	907	1111	585	TO350
400WQ1100-21-90-6(I)	400	1100	21	987	90	380	187	80	2830	2858	2070	1092	1138	676	TO400
400WQ1100-24-110-6(I)	400	1100	24	984	110	380	211	80	2845	2858	2070	1092	1138	676	TO400
400WQ1600-22-132-6(I)	400	1600	22	995	132	380	252	85	2990	2863	2100	1092	1138	676	TO400
400WQ1600-26-150-6(I)	400	1600	26	994	150	380	286	85	3120	2863	2100	1092	1138	676	TO400
500WQ1600-15-90-6(I)	500	1600	15	987	90	380	187	100	2795	2923	2140	1256	1372	738	TO500
500WQ1600-18-110-6(I)	500	1600	18	984	110	380	211	100	2780	2923	2140	1256	1372	738	TO500
500WQ2000-18-132-6(I)	500	2000	18	995	132	380	252	110	3050	2962	2150	1293	1471	776	TO500
500WQ2000-20-150-6(I)	500	2000	20	994	150	380	286	110	3185	2962	2150	1293	1471	776	TO500

Performance curve

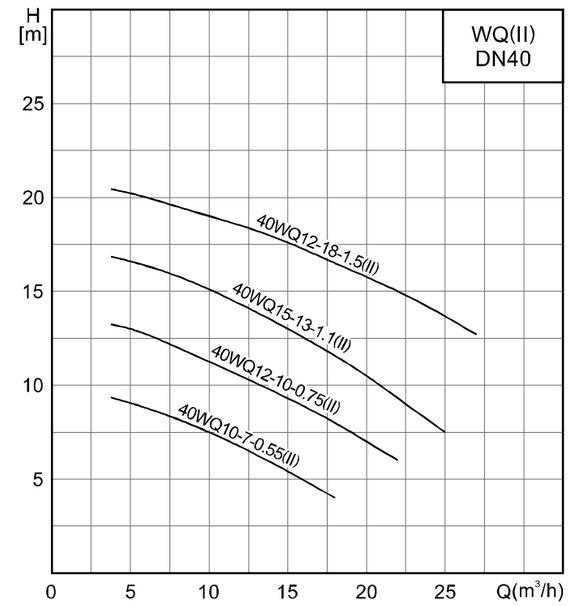

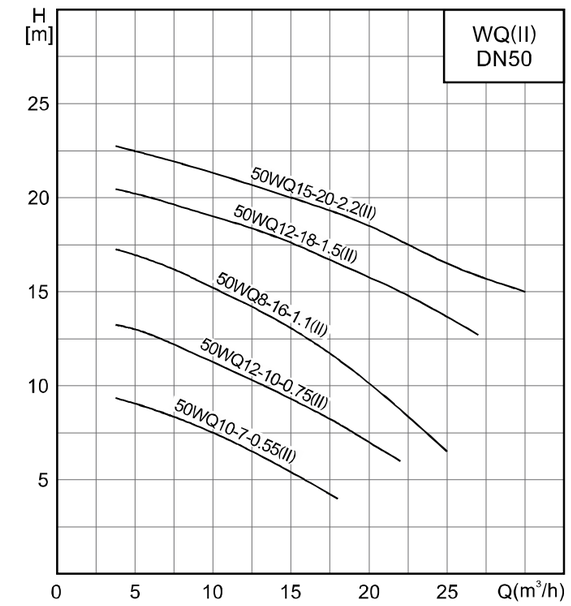

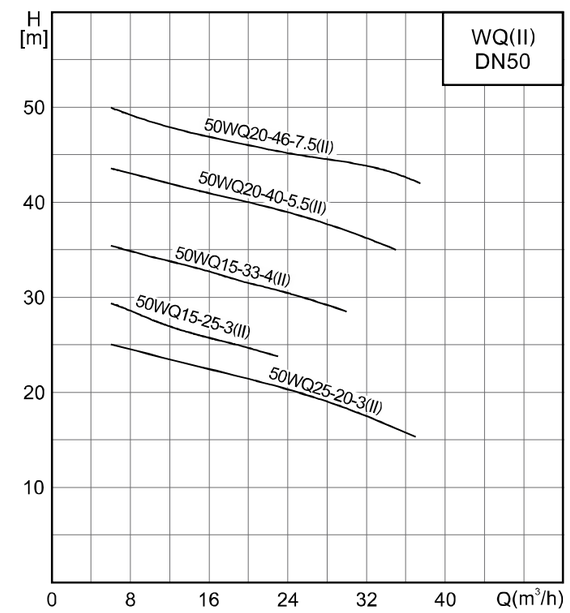

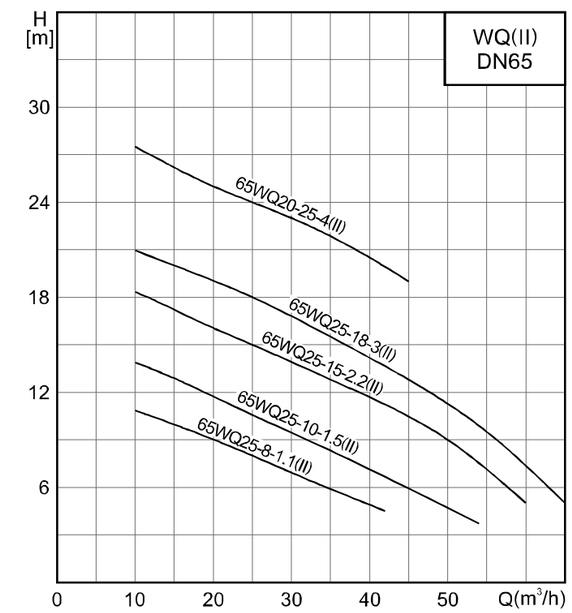

Performance curve

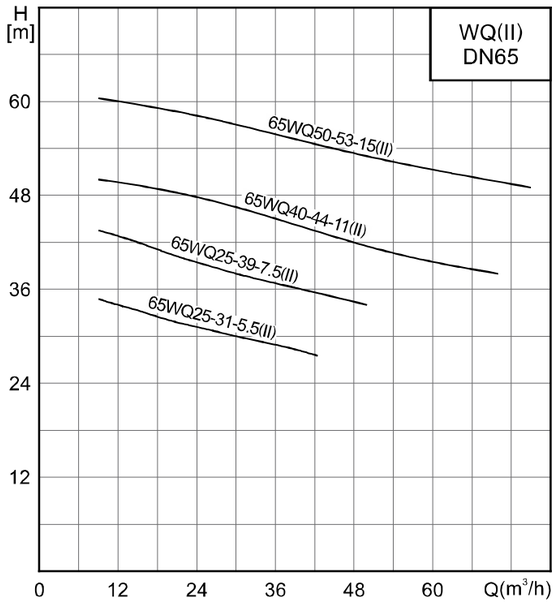

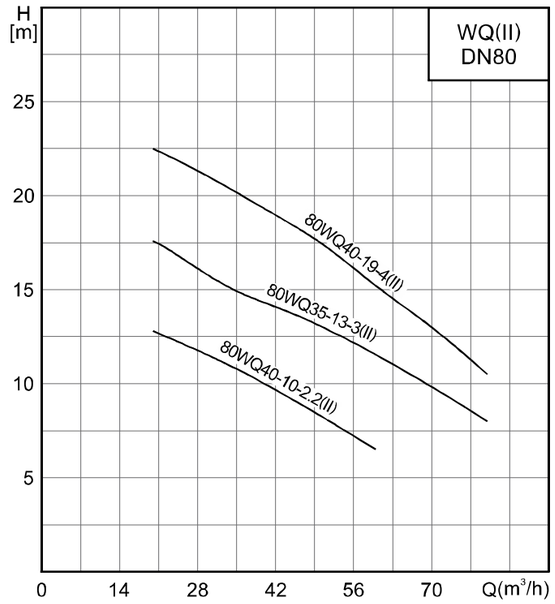

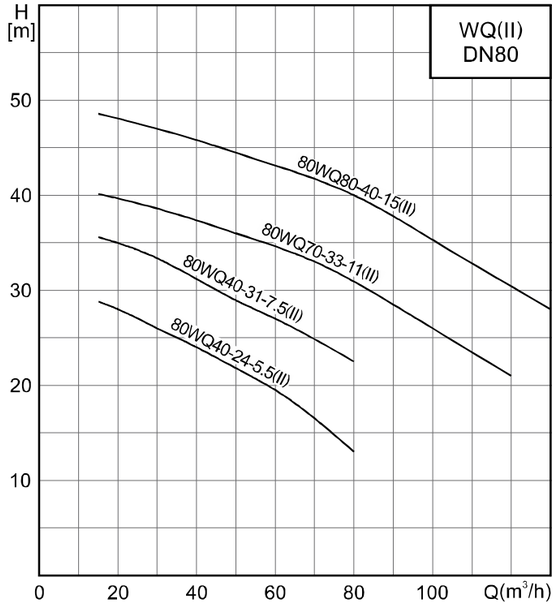

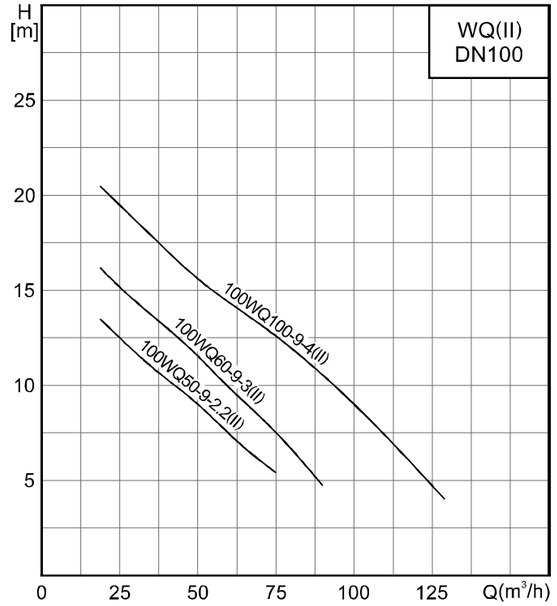

Performance curve

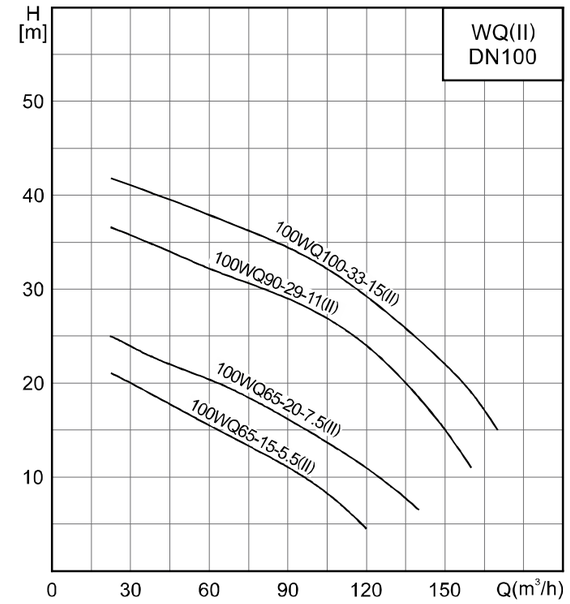

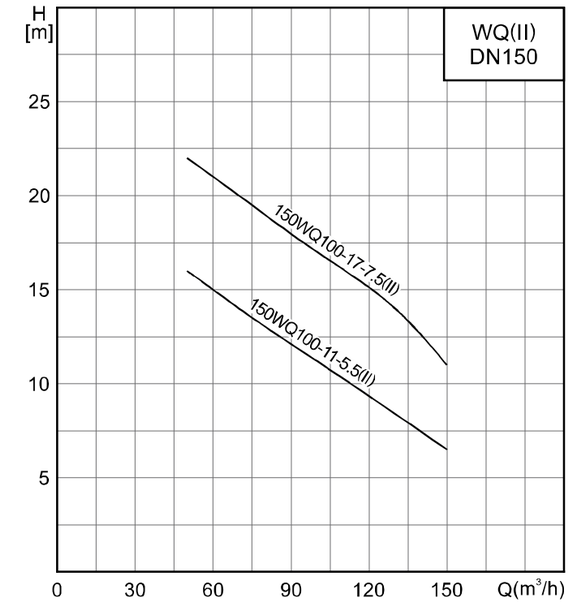

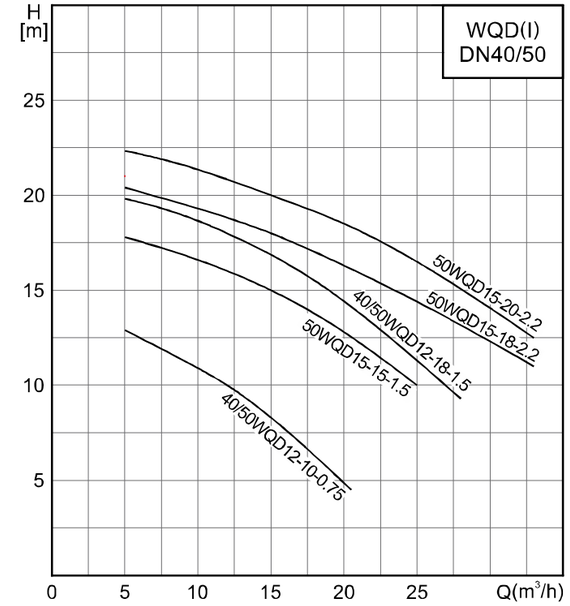

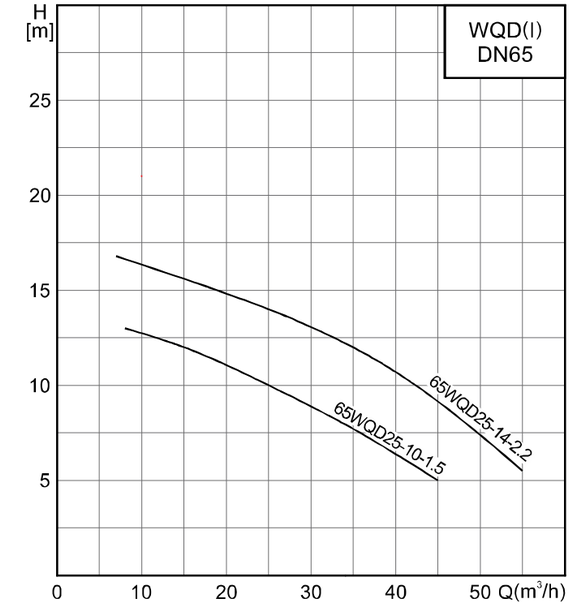

Performance curve

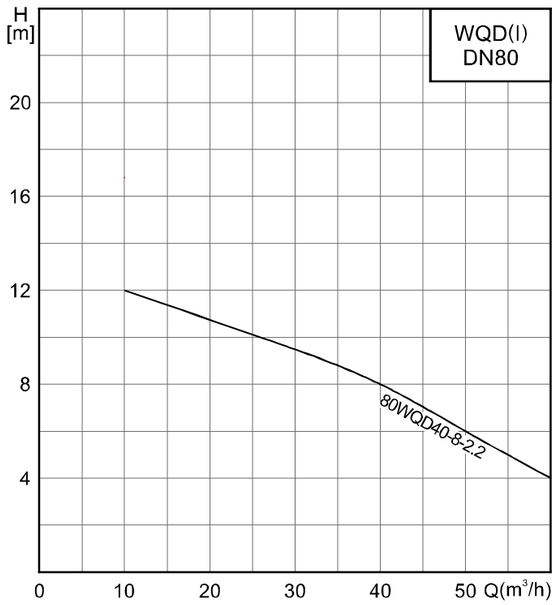

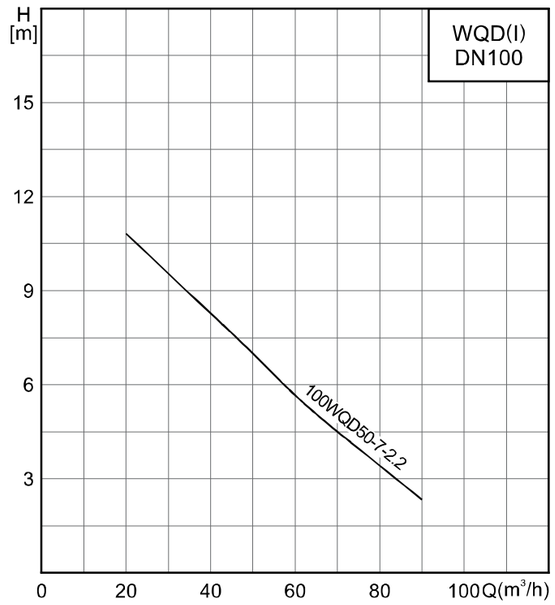

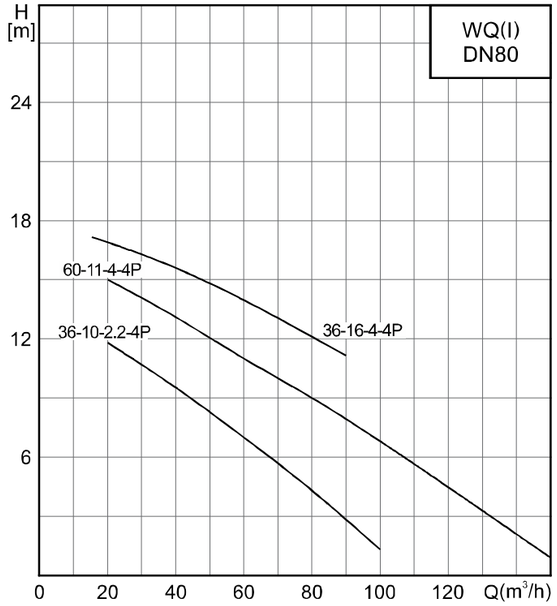

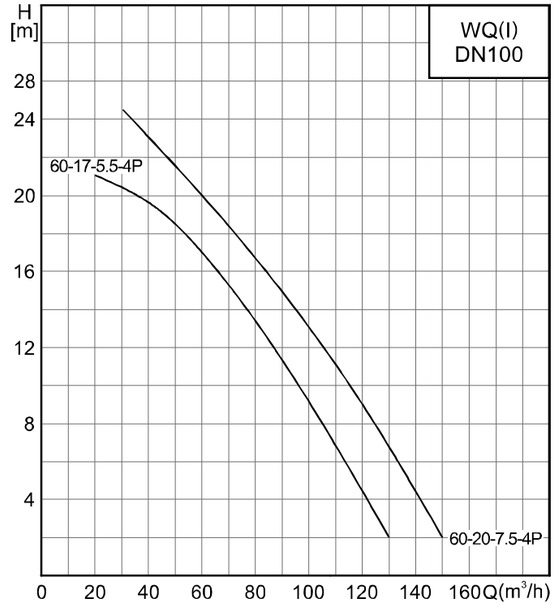

Performance curve

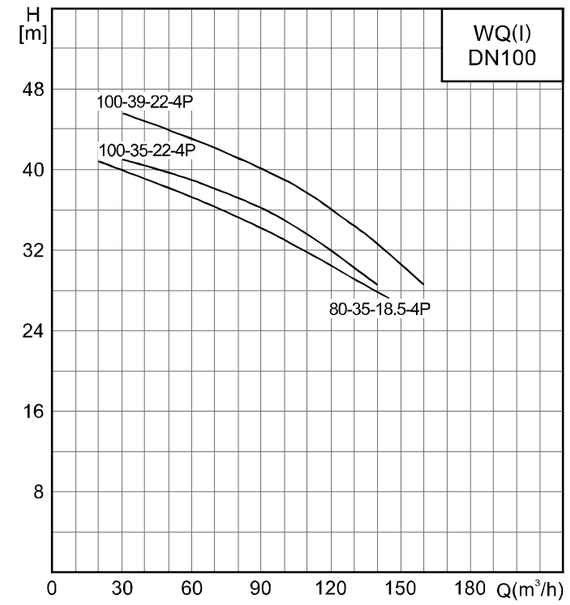

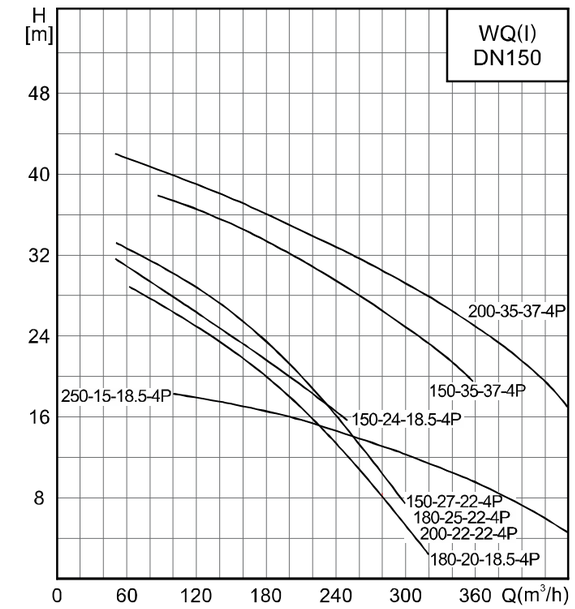

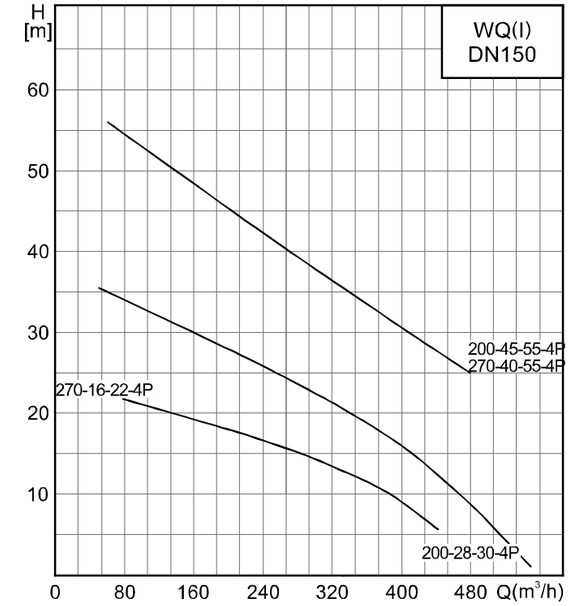

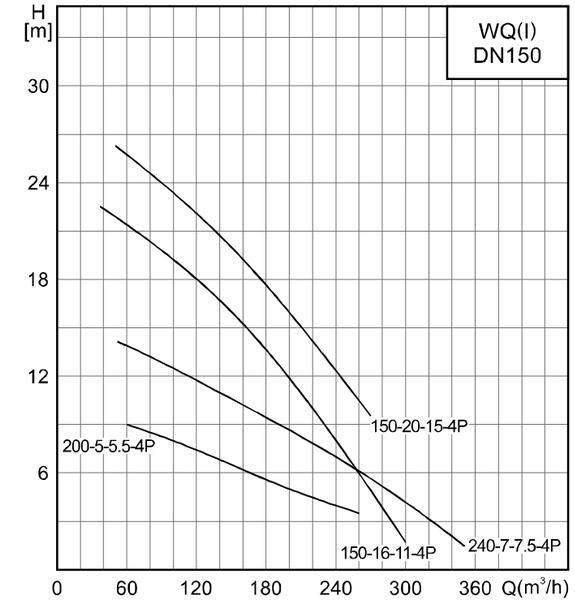

Performance curve

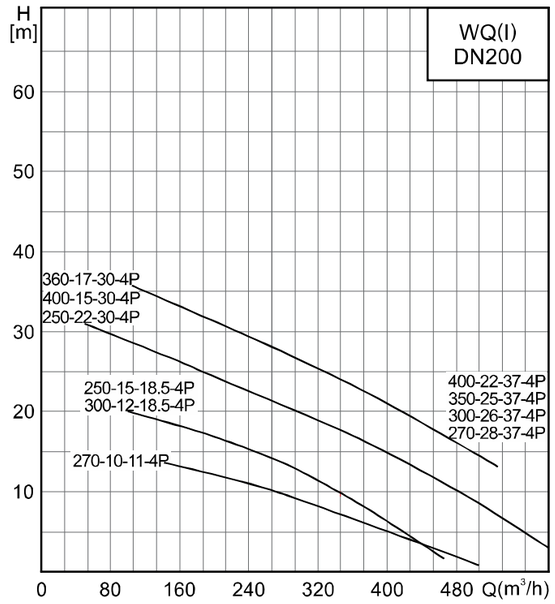

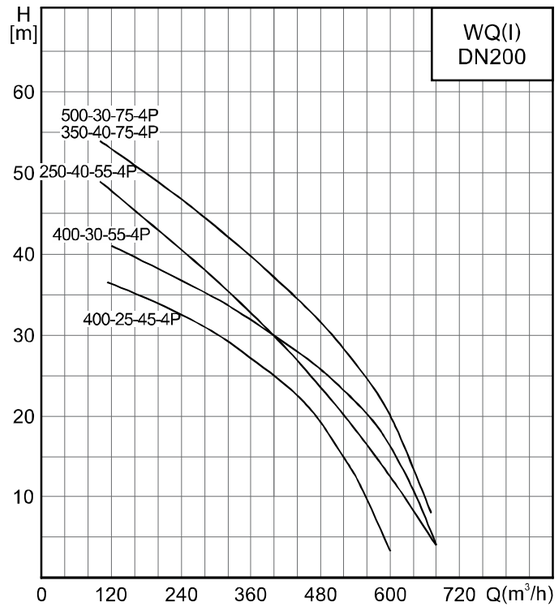

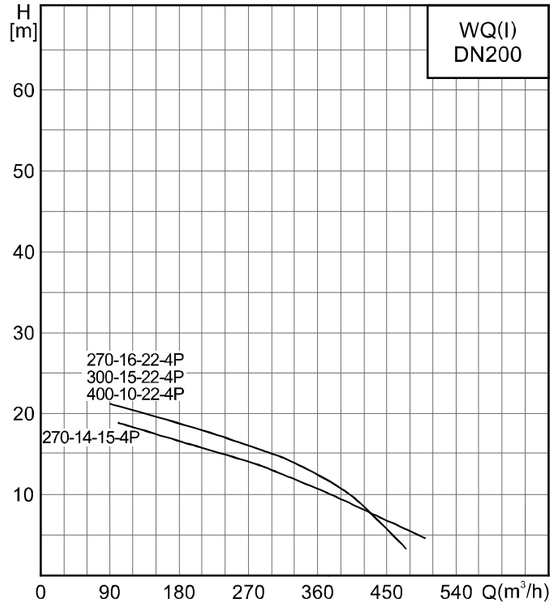

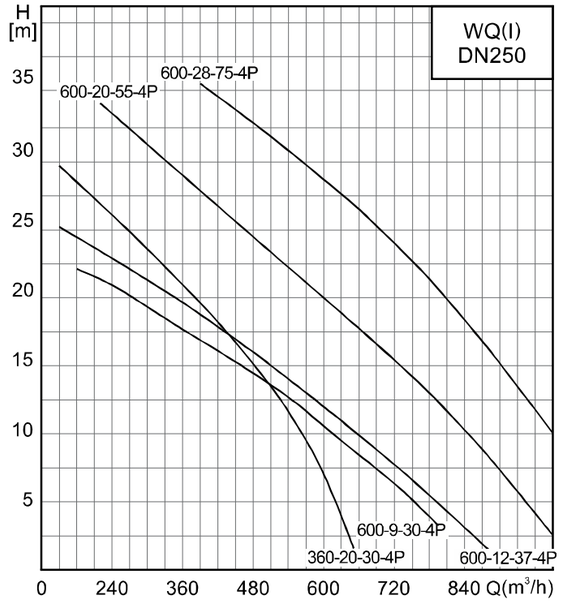

Performance curve

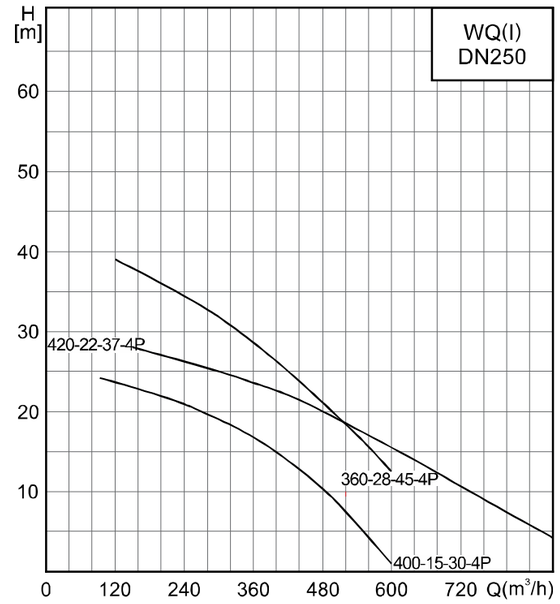

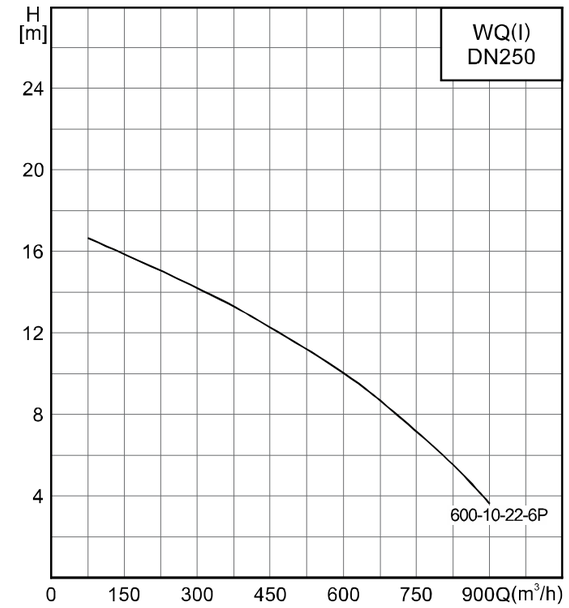

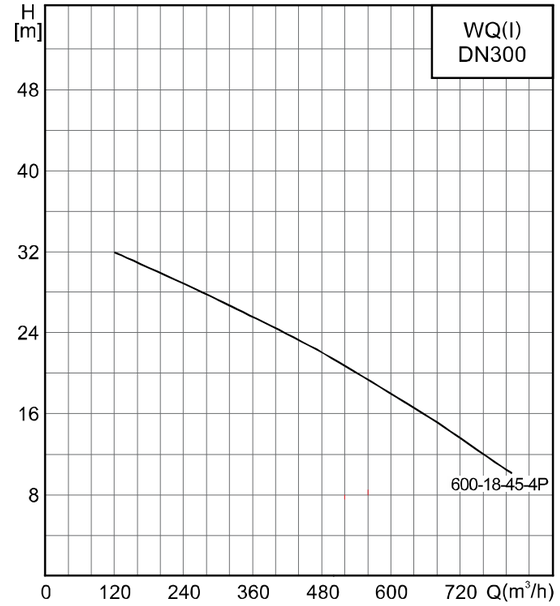

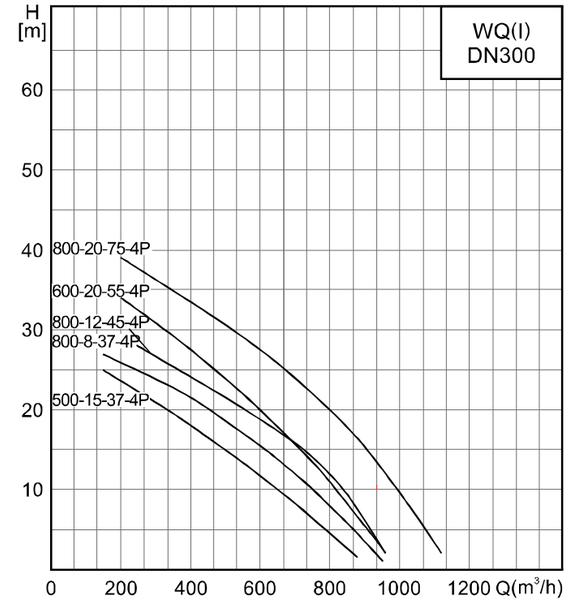

Performance curve

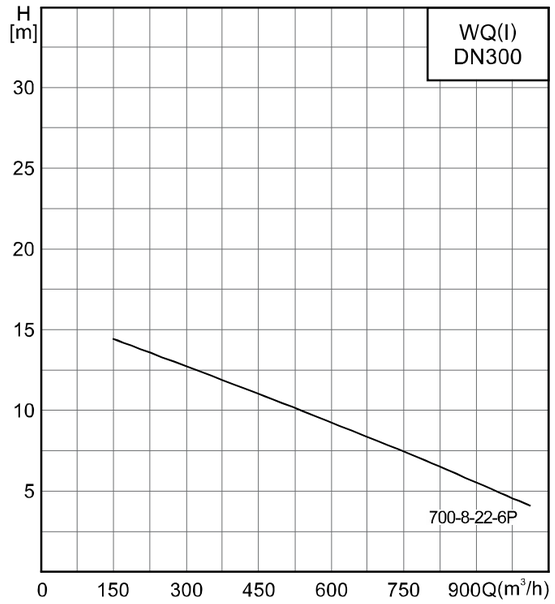

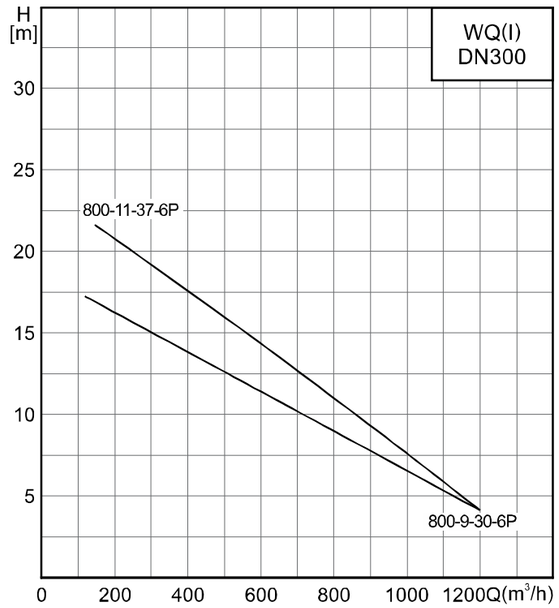

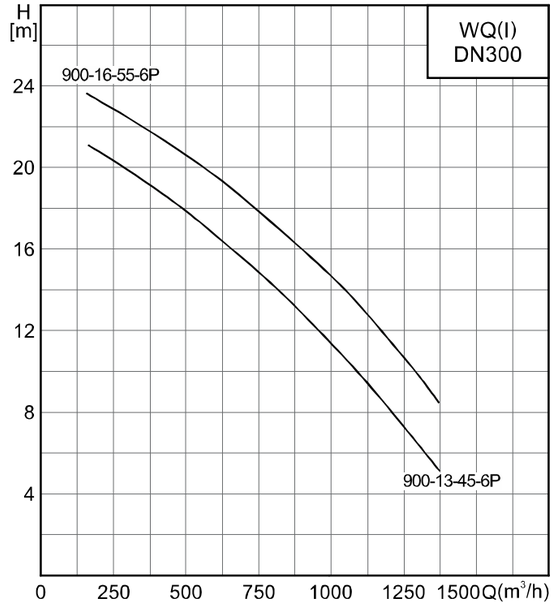

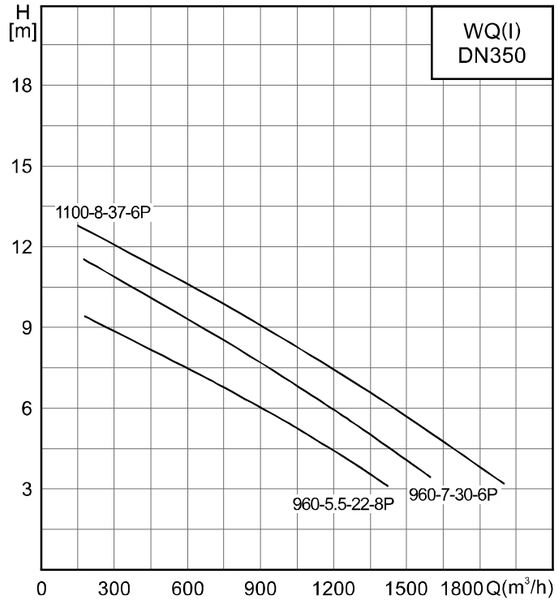

Performance curve

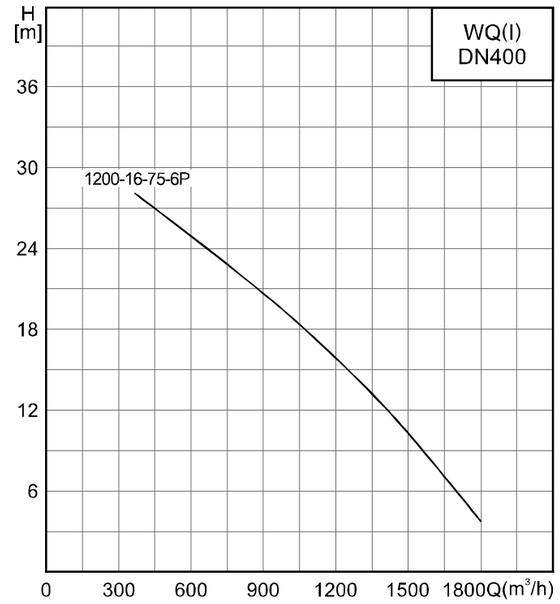

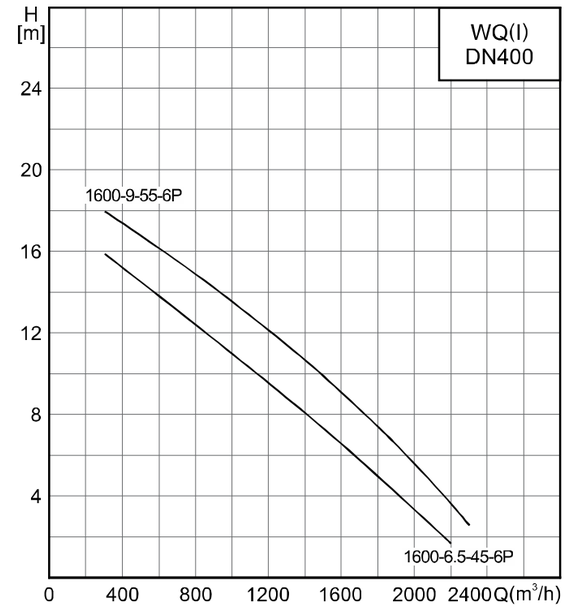

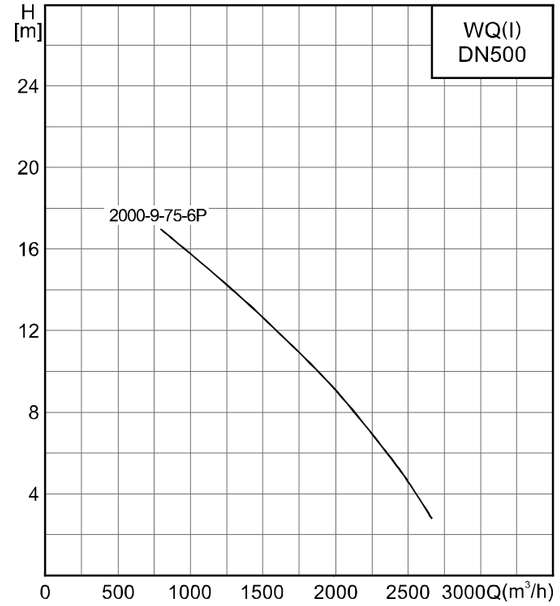

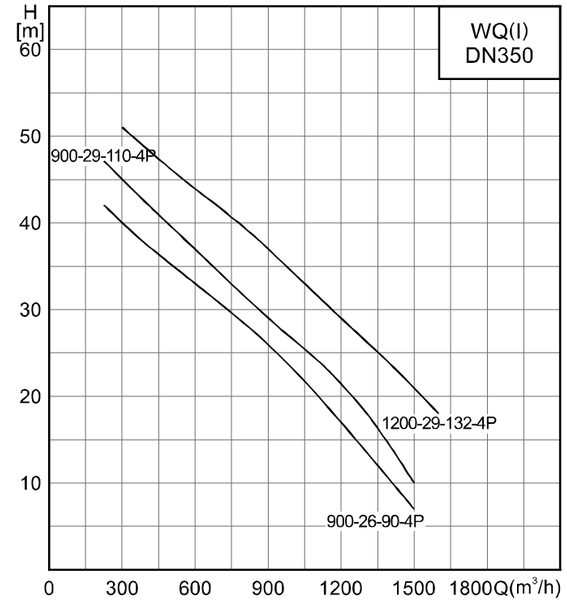

Performance curve

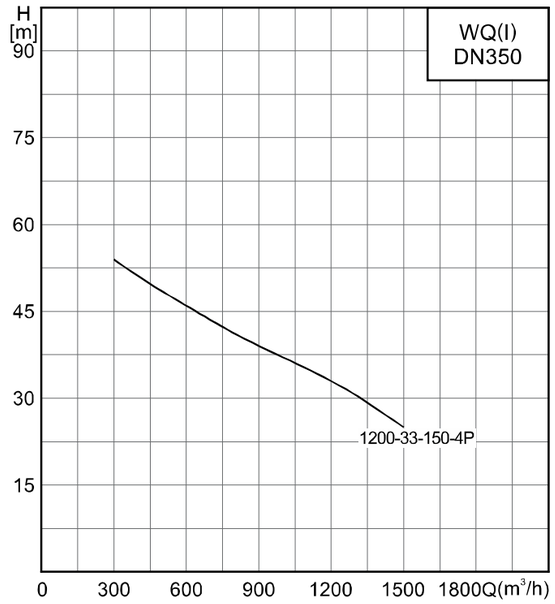

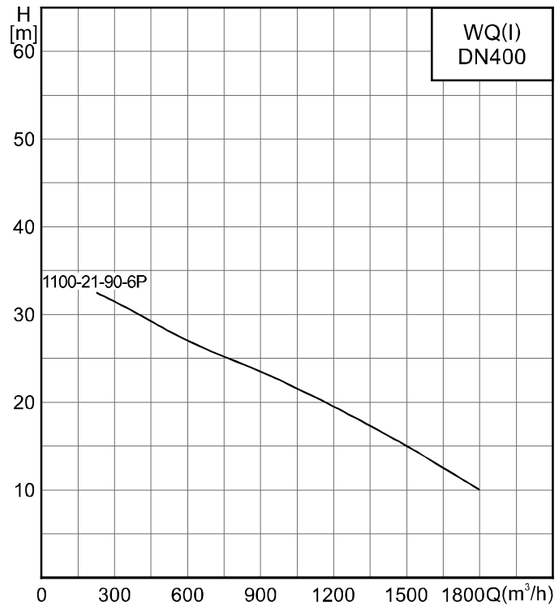

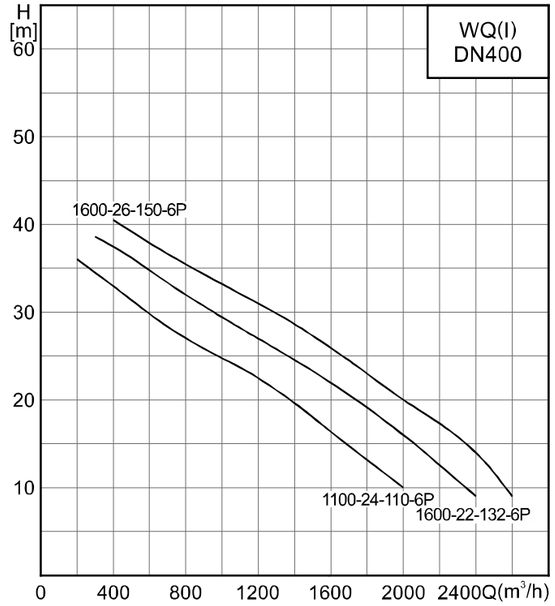

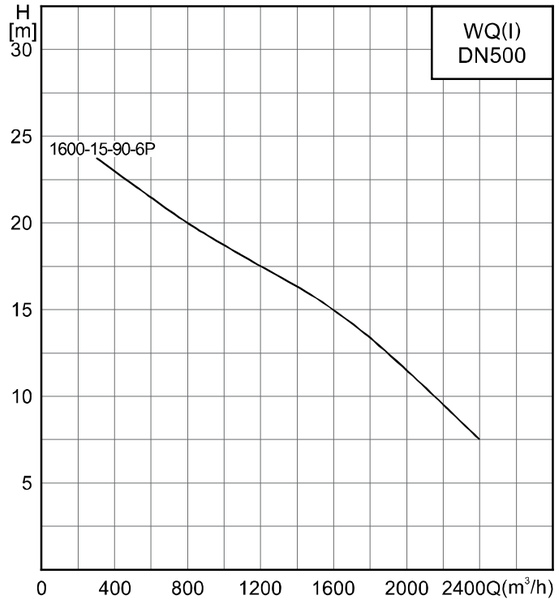

Performance curve

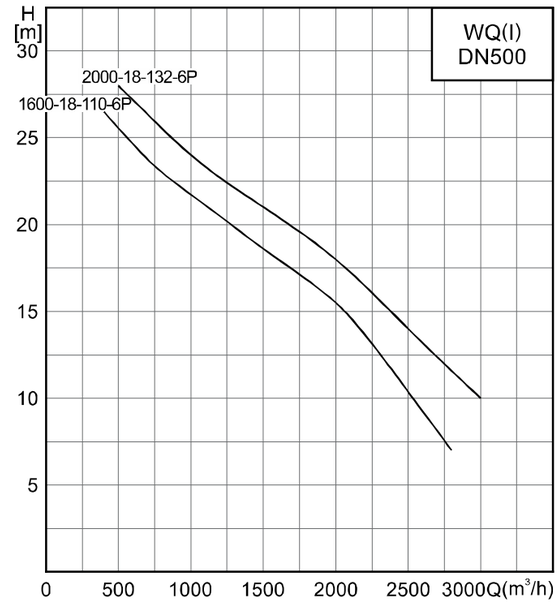

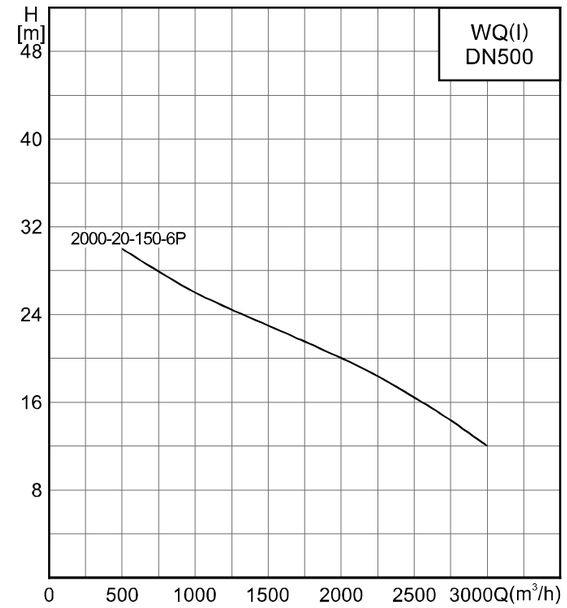

WQ-JY(I) type submersible sewage pump

Sectional drawing

WQ-JY(I)type

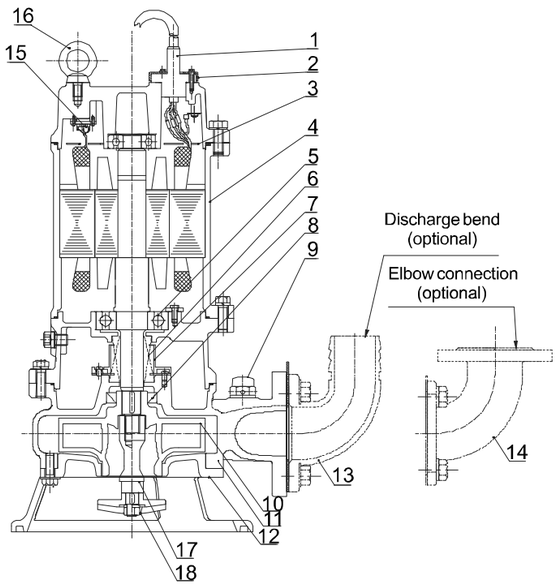

The pump is equipped with a stiring impeller. When the pumps running, the impeller is rotated to prevent the precipitation of dirt near the pump, which affects the normal operation of the pump and prevents the sediment at the bottom of the pool.

No.	Name	Material
1	Cable	YZW
2	Cable gland	/
3	Threading board	/
4	Filter bracket	/
5	Bearing	/
6	Mechanical seal	Graphite/SIC SIC/SIC+C
7	Oil lifter	/
8	Oil seal	NBR1-2
9	Air vent screw	Resin/others
10	Impeller	HT200
11	Casing	HT200
12	Suction cover	HT200
13	Discharge bend (optional)	HT200
14	Elbow connection (optional)	HT200
15	Thermal protector	/
16	Eye-bolt	/
17	Stir shaft(for JY)	20Cr13
18	Stir impeller(for JY)	HT200

Technical data and dimensions

WQ- JY (I) type submersible sewage pumps

Model	Dia.	Q	H	Speed	Power	Rated voltage	Rated current	Max.Dia. of passing solid	Weight	Dimensions(mm)					Coupling
	(mm)	(m^3/h)	(m)	(rpm)	(kW)	(V)	(A)	(mm)	(kg)	H	H1	H2	F	H3	
50WQ9-7-0.55JY(I)	50	9	7	2850	0.55	380	1.3	15	20.5	415	285	203	222	93	TOS50
50WQ12-10-0.75JY(I)	50	12	10	2850	0.75	380	1.8	15	21.5	415	285	203	222	93	TOS50
50WQ7-15-1.1JY(I)	50	7	15	2850	1.1	380	2.6	20	25.5	440	300	214	244	104	TOS50
50WQ15-15-1.5JY(I)	50	15	15	2880	1.5	380	3.3	20	33	475	310	216	270	106.5	TOS50
50WQ15-18-2.2JY(I)	50	15	18	2880	2.2	380	4.6	22	37.5	510	320	216	279	106.5	TOS50
50WQ15-25-3JY(I)	50	15	25	2840	3	380	6.1	25.5	44	540	335	218	279	108	TOS50
50WQ15-32-4JY(I)	50	15	32	2840	4	380	7.7	25.5	49.5	557	351	221	321	111	TOS50
50WQ15-38-5.5JY(I)	50	15	38	2940	5.5	380	10.8	19.5	84	790	450	221	321	118.5	TOS50
65WQ15-10-1.1JY(I)	65	15	10	2850	1.1	380	2.6	23	27	440	300	214	246	104	TOS65
65WQ25-9-1.5JY(I)	65	25	9	2850	1.5	380	3.3	28	30	480	340	160	283	110	TOS65
65WQ25-13-2.2JY(I)	65	25	13	2880	2.2	380	4.6	24	40.5	526	340	235	287	115.5	TOS65
65WQ35-9-2.2JY(I)	65	35	9	2880	2.2	380	4.6	24	40.5	526	340	235	287	115.5	TOS65
65WQ25-18-3JY(I)	65	25	18	2840	3	380	6.1	25.5	46	542	336	229	275	106.5	TOS65
65WQ20-27-4JY(I)	65	20	27	2840	4	380	7.7	26	52	563	357	235	320	114.5	TOS65
65WQ25-30-5.5JY(I)	65	25	30	2940	5.5	380	10.8	17.5	86	793	450	236	314	129.5	TOS65
80WQ40-10-2.2JY(I)	80	40	10	2880	2.2	380	4.6	26.5	42.5	545	370	256	296	120.5	TOS80
80WQ35-13-3JY(I)	80	35	13	2840	3	380	6.1	34.5	47	565	360	256	300	120.5	TOS80
80WQ40-15-4JY(I)	80	40	15	2840	4	380	7.7	26	51	563	357	250	318	114.5	TOS80
80WQ40-22-5.5JY(I)	80	40	22	2940	5.5	380	10.8	17.5	85.5	793	450	251	310	129.5	TOS80
80WQ40-30-7.5JY(I)	80	40	30	2940	7.5	380	14.3	17.5	92	790	500	251	310	130	TOS80
100WQ50-7-2.2JY(I)	100	50	7	2880	2.2	380	4.6	45	48	522	400	170	323	120.5	TOS100
100WQ50-10-3JY(I)	100	50	10	2840	3	380	6.1	10	50	564	420	190	311	120.5	TOS100
100WQ50-12-4JY(I)	100	50	12	2840	4	380	7.7	34.5	53.5	607	400	292	337	142	TOS100
100WQ75-12-4JY(I)	100	75	12	2840	4	380	7.7	34.5	53.5	607	400	292	337	142	TOS100
100WQ65-15-5.5JY(I)	100	65	15	2940	5.5	380	10.8	35.5	89	835	500	292	337	145	TOS100
100WQ70-18-7.5JY(I)	100	70	18	2940	7.5	380	14.3	32.5	98	835	500	297	365	147	TOS100
100WQ100-15-7.5JY(I)	100	100	15	2940	7.5	380	14.3	32.5	98	835	500	297	365	147	TOS100
150WQ100-10-7.5JY(I)	150	100	10	2940	7.5	380	14.3	31	109	850	510	365	398	157.5	TOS150
150WQ140-10-7.5JY(I)	150	140	10	2940	7.5	380	14.3	30	105	909	670	425	398	214.5	TOS150
65WQ35-50-11JY(I)	65	35	50	2930	11	380	21.7	22	98	916	630	311	363	191	TOS65
65WQ30-54-11JY(I)	65	30	54	2930	11	380	21.7	22	98	916	630	311	362	191	TOS65
80WQ50-29-11JY(I)	80	50	29	2930	11	380	21.7	22	138	924	670	320	410	181.5	TOS80
100WQ100-22-11JY(I)	100	100	22	2930	11	380	21.7	25	131	908	650	344	388	194	TOS100
100WQ100-30-15JY(I)	100	100	30	2930	15	380	29.1	27.5	136	908	650	344	388	214.5	TOS100
100WQ100-35-22JY-4(I)	100	100	35	1460	22	380	43.1	35	313	1232	950	439	605	320.5	TOS100F
150WQ150-13-11JY-4(I)	150	150	13	1440	11	380	22.9	52	219	1097	813	535	575	325	TOS150
150WQ140-24-15JY(I)	150	140	24	2930	15	380	29.1	40	148	955	690	425	398	325	TOS150
150WQ150-19-15JY-4(I)	150	150	19	1440	15	380	30.6	57	240	1167	880	535	573	325	TOS150
150WQ200-17-18.5JY-4(I)	150	200	17	1460	18.5	380	36.9	45	295	1270	980	500	575	289	TOS150
150WQ250-15-18.5JY-4(I)	150	250	15	1460	18.5	380	36.9	45	313	1273	980	530	575	289	TOS150

Technical data and dimensions

WQ- JY (I) type submersible sewage pumps

Model	Dia.	Q	H	Speed	Power	Rated voltage	Rated current	Max.Dia. of passing solid	Weight	Dimensions(mm)					Coupling
	(mm)	(m^3/h)	(m)	(rpm)	(kW)	(V)	(A)	(mm)	(kg)	H	H1	H2	F	H3	
150WQ150-25-22JY-4(I)	150	150	25	1460	22	380	43.1	65	323	1273	980	500	575	320	TOS150
150WQ300-16-22JY-4(I)	150	300	16	1460	22	380	43.1	65	326	1273	980	530	575	320.5	TOS150
200WQ210-11-11JY-4(I)	200	210	11	1440	11	380	22.9	50	258	1135	810	545	569	335	TO200
200WQ300-11-15JY-4(I)	200	300	11	1440	15	380	30.6	35	258	1184	880	550	547	340	TO200
200WQ300-13-18.5JY-4(I)	200	300	11	1460	18.5	380	36.9	63	313	1273	980	532	575	320.5	TO200

Performance curve

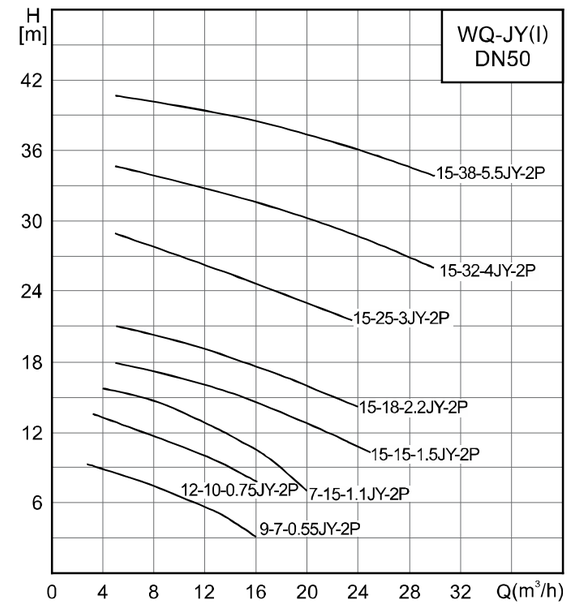

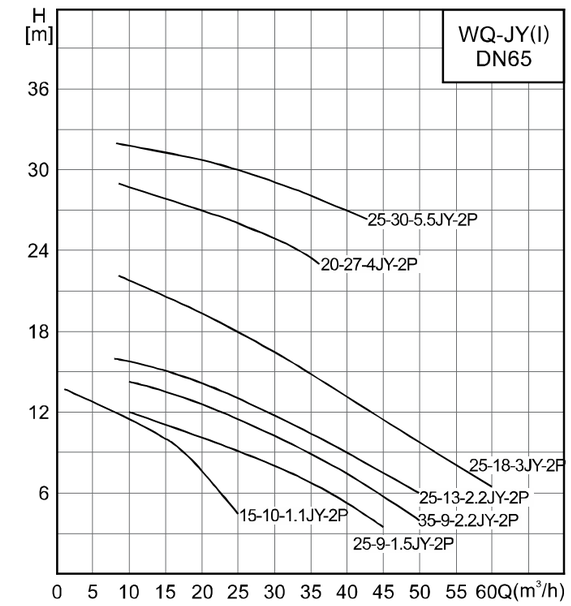

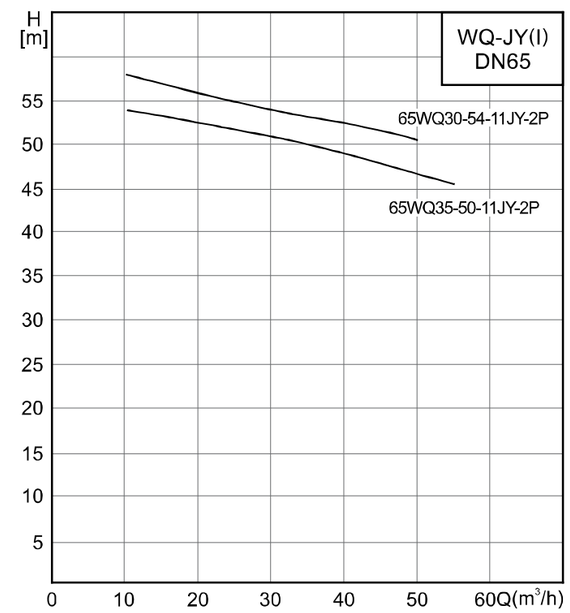

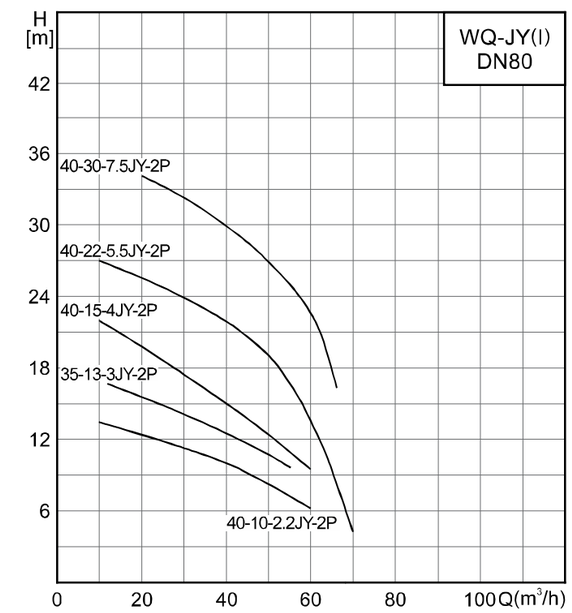

Performance curve

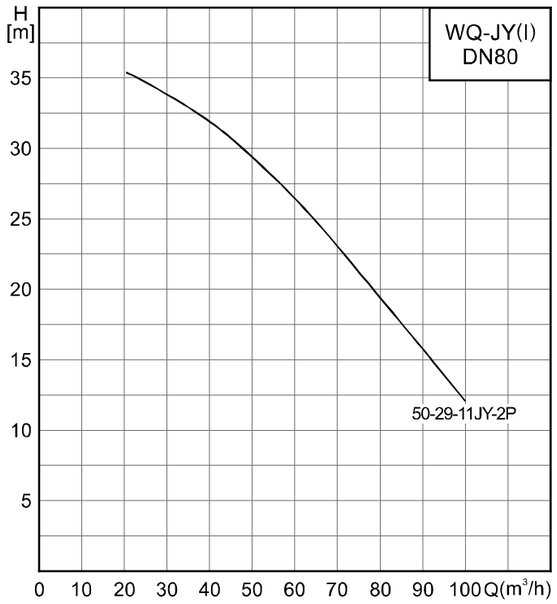

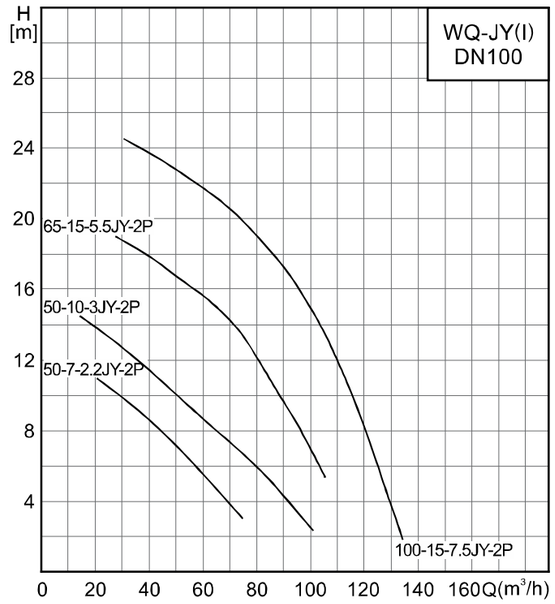

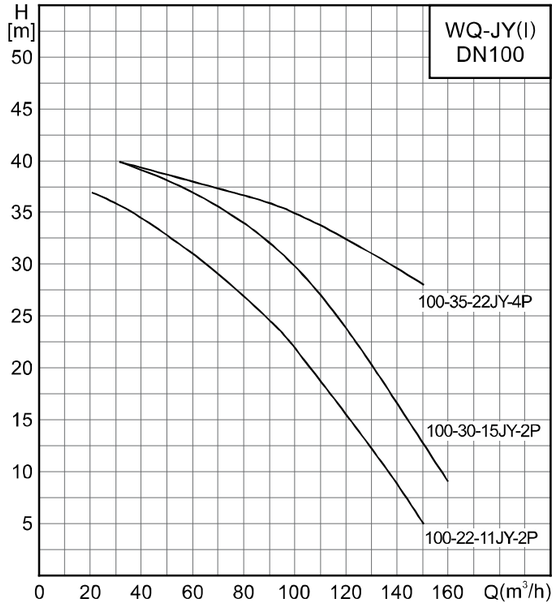

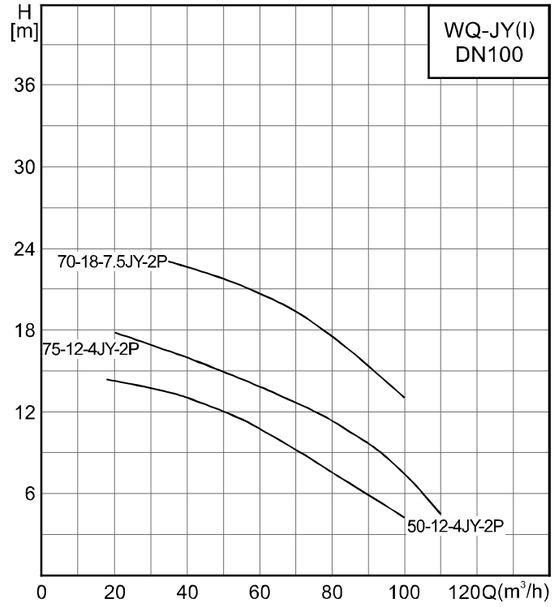

Performance curve

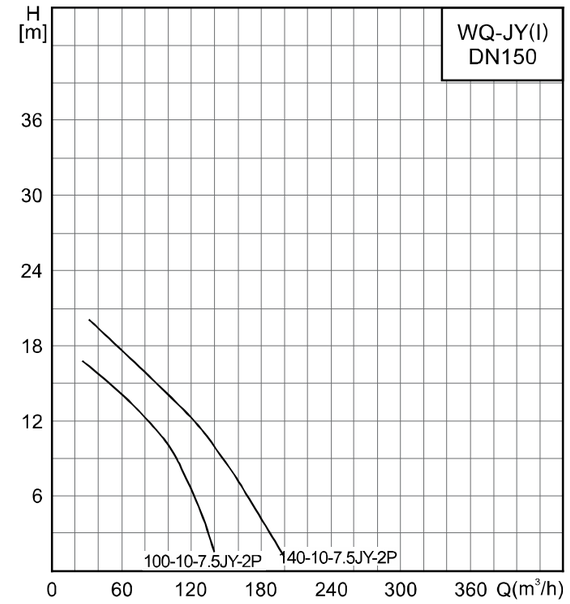

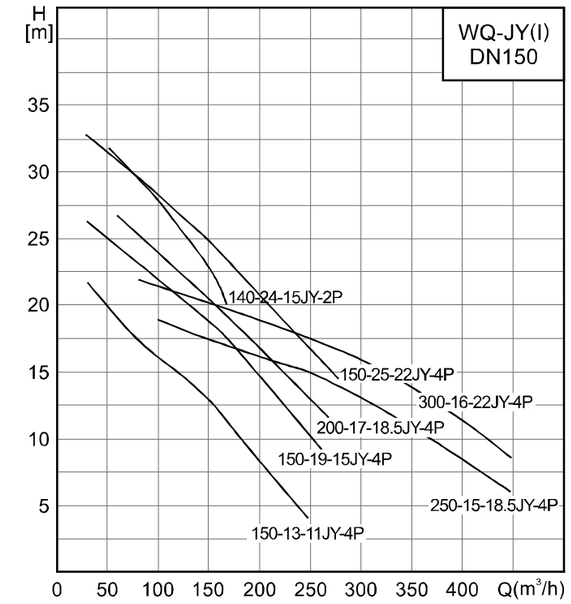

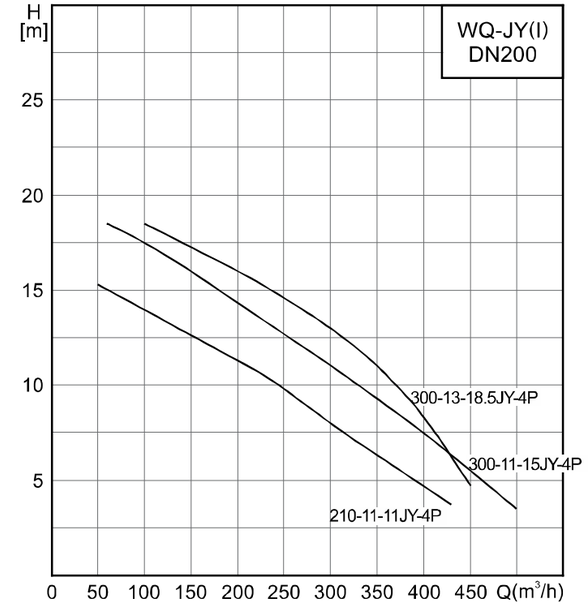

WQ-QG(I) cutting type submersible sewage pump

Cutting type pump with 2-pole motor

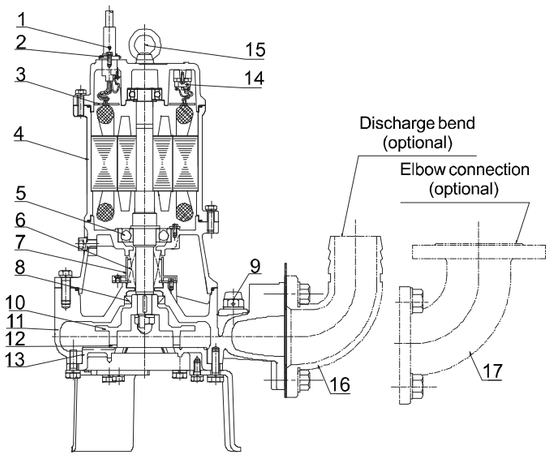

With the reasonable structure of cutting type, the pump is able to prevent clogging at the extreme. It consists of rotating impeller which with cutting blade and suction cover which with zigzag fixed gear. The edge of blade and zigzag cover will move in the opposite direction when impeller rotates. It ensures the excellent cutting performance of the pump. Impeller and suction cover are produced by casting process which can improve the head of the pump.

No.	Name	Material
1	Cable	YZW
2	Cable gland	/
3	Threading board	/
4	Electric motor	/
5	Bearing	/
6	Mechanical seal	Graphite/SIC SIC/SIC+C
7	Oil lifter	/
8	Oil seal	NBR1-2
9	Air vent screw	Resin/others
10	Impeller	HT200
11	Casing	HT200
12	Cutting blade	Cemented carbide
13	Suction cover	QT600
14	Circle thermal protector	/
15	Eye-bolt	/
16	Discharge bend (optional)	HT200
17	Elbow connection (optional)	HT200

Technical data and dimensions

WQ-QG(I) cutting type submersible sewage pump

Model	Dia.	Q	H	Speed	Power	Rated voltage	Rated current	Max.Dia. of passing solid	Weight	Dimensions(mm)					Coupling
	(mm)	(m^3/h)	(m)	(rpm)	(kW)	(V)	(A)	(mm)	(kg)	H	H1	H2	F	H3	
32WQ6-20-1.1QG(I)	32	6	20	2850	1.1	380	2.6	12	23	398	270	157	237	82	无
50WQ10-10-0.75QG(I)	50	10	10	2850	0.75	380	1.8	11	21.5	415	285	203	222	93	TOS50
50WQ10-15-1.1QG(I)	50	10	15	2850	1.1	380	2.6	13	22	415	280	201	238	93	TOS50
50WQ15-15-1.5QG(I)	50	15	15	2880	1.5	380	3.3	23	33	464	320	197	271	96.5	TOS50
50WQ15-20-2.2QG(I)	50	15	20	2880	2.2	380	4.6	12	37.5	510	320	216	279	107	TOS50
50WQ15-28-3QG(I)	50	15	28	2840	3	380	6.1	20	45	540	370	119	294	108.5	TOS50
50WQ25-27-4QG(I)	50	25	27	2840	4	380	7.7	22	50	556	420	221	337	111.5	TOS50
80WQ25-15-2.2QG(I)	80	25	15	2880	2.2	380	4.6	22	45	576	440	291	313	156.5	TOS80
80WQ36-10-2.2QG-4(I)	80	36	10	1413	2.2	380	5.5	47	56	643	500	308	363	168.5	TOS80
80WQ40-12-3QG(I)	80	40	12	2840	3	380	6.1	22	45	586	450	276	300	141	TOS80
80WQ40-17-4QG(I)	80	40	17	2840	4	380	7.7	22	48	609	465	292	313	156.5	TOS80
80WQ60-11-4QG-4(I)	80	60	11	1413	4	380	8.4	65	70	717	570	315	369	173.5	TOS80
80WQ50-22-5.5QG(I)	80	50	22	2940	5.5	380	10.8	23	85	879	570	320	410	185	TOS80
80WQ45-29-7.5QG(I)	80	45	29	2940	7.5	380	14.3	25	99	879	600	320	410	185	TOS80
80WQ35-40-11QG(I)	80	35	40	2930	11	380	21.7	25	130	927	660	320	410	185	TOS80

※Please contact the salesman for overall dimension drawing. The dimensions of above table please refer to page 8.

Performance curve

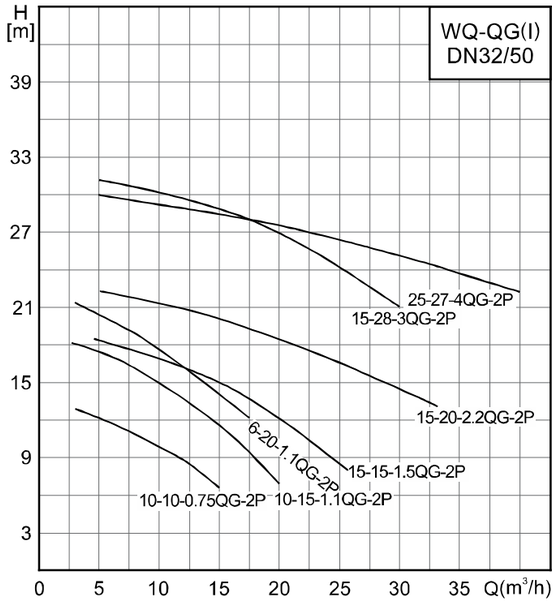

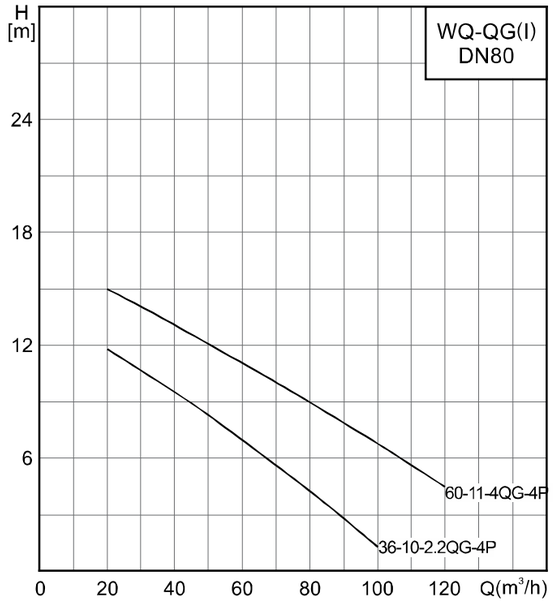

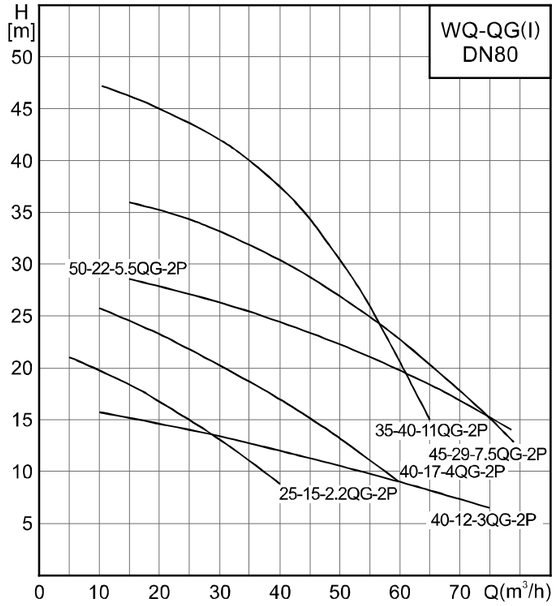

WQ-W(I) non-clogging cutting type submersible sewage pump

2-pole motor cutting pump

WQ-W(I)type

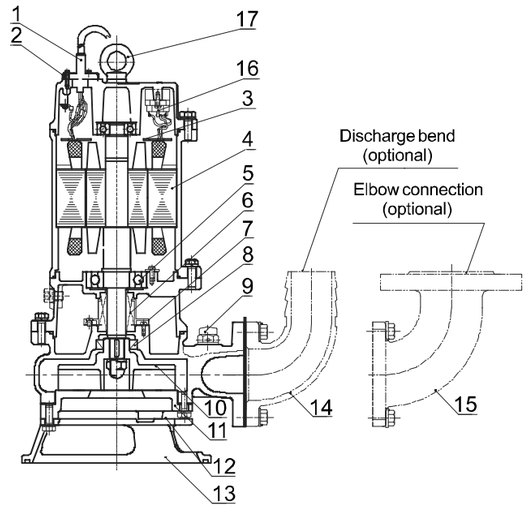

With the reasonable structure of cutting type, the pump is able to prevent clogging at the extreme. It consists of rotating impeller which with cutting blade and suction cover which with zigzag fixed gear. The edge of blade and zigzag cover will move in the opposite direction when impeller rotates. It ensures the excellent cutting performance of the pump, Impeller and suction cover are produced by casting process which can improve the head of the pump.

No.	Name	Material
1	Cable	YZW
2	Cable gland (below 4KW)	SUS304
	Cable gland (above 5.5KW)	HT200
3	Threading board (below 4KW)	PPS
	Threading board (below 5.5KW)	Q235
4	Electric motor	/
5	Bearing	/
6	Mechanical seal	Graphite/SIC SIC/SIC+C
7	Oil lifter	/
8	Oil seal	NBR1-2
9	Air vent screw	Resin/others
10	Impeller	QT500
11	Casing	HT200
12	Non-clogging suction cover	QT500
13	Non-clogging foot bracket	QT500
14	Discharge bend (optional)	HT200
15	Elbow connection (optional)	HT200
16	Thermal protector	/
17	Eye-bolt	/

Technical data and dimensions

WQ-W(I) non-clogging cutting type submersible sewage pump

Model	Dia.	Q	H	Speed	Power	Rated voltage	Rated current	Max.Dia. of passing solid	Weight	Dimensions(mm)					Coupling
	(mm)	(m^3/h)	(m)	(rpm)	(kW)	(V)	(A)	(mm)	(kg)	H	H1	H2	F	H3	
40WQ9-5-0.37W(I)	40	9	5	2800	0.37	380	1.0	15	16	374	260	169	184	79	WT40
40WQ10-7-0.55W(I)	40	10	7	2850	0.55	380	1.2	15	20	420	285	189	222	99	TOS40
40WQ10-10-0.75W(I)	40	10	10	2850	0.75	380	1.8	15	23	420	285	189	222	99	TOS40
40WQ12-15-1.5W(I)	40	12	15	2880	1.5	380	3.3	18	35	478	340	202	269	112	TOS40
50WQ10-13-1.1W(I)	50	10	13	2850	1.1	380	2.6	18	27	443	330	217	241	107.5	TOS50
50WQ10-7-0.55W(I)	50	10	7	2850	0.55	380	1.2	15	20	420	285	209	222	99	TOS50
50WQ10-10-0.75W(I)	50	10	10	2850	0.75	380	1.8	15	23	420	285	209	222	99	TOS50
50WQ12-15-1.5W(I)	50	12	15	2880	1.5	380	3.3	18	35	478	340	222	269	114	TOS50
50WQ15-18-2.2W(I)	50	15	18	2880	2.2	380	4.6	18	39	517	370	224	283	114	TOS50
50WQ15-25-3W(I)	50	15	25	2840	3	380	6.1	20	47	547	400	225	283	115	TOS50
50WQ25-25-4W(I)	50	25	25	2840	4	380	7.7	18	52	593	450	257	298	147	TOS50
50WQ18-32-5.5W(I)	50	18	32	2940	5.5	380	10.8	18	86	814	540	244	324	133.5	TOS50
65WQ15-10-1.1W(I)	65	15	10	2850	1.1	380	2.6	18	29	443	330	227	241	107.5	TOS65
65WQ25-10-1.5W(I)	65	25	10	2880	1.5	380	3.3	18	38	485	350	230	279	110	TOS65
65WQ25-14-2.2W(I)	65	25	14	2880	2.2	380	4.6	18	42	531	390	241	298	121	TOS65
65WQ25-18-3W(I)	65	25	18	2840	3	380	6.1	19	48	550	390	236	278	115.5	TOS65
65WQ40-16-4W(I)	65	40	16	2840	4	380	7.7	18	52	598	470	270	298	149.5	TOS65
65WQ30-25-5.5W(I)	65	30	25	2940	5.5	380	10.8	20	87	824	590	270	324	149.5	TOS65
80WQ40-8-2.2W(I)	80	40	8	2880	2.2	380	4.6	22	49	548	400	259	296	124	TOS80
80WQ35-13-3W(I)	80	35	13	2840	3	380	6.1	19	51	575	430	265	283	130.5	TOS80
80WQ50-12-4W(I)	80	50	12	2840	4	380	7.7	15	55	598	450	285	303	150	TOS80
80WQ40-22-5.5W(I)	80	40	22	2940	5.5	380	10.8	20	87	825	590	285	324	149.5	TOS80
100WQ50-10-3W(I)	100	50	10	2840	3	380	6.1	19	50	575	430	281	311	130.5	TOS100
100WQ60-11-4W(I)	100	60	11	2840	4	380	7.7	18	55	630	500	315	303	165	TOS100
100WQ65-15-5.5W(I)	100	65	15	2940	5.5	380	10.8	24	92	857	560	315	334	165	TOS100
65WQ45-28-7.5W(I)	65	45	28	2940	7.5	380	14.3	33	100	855	590	316	351	149.5	TOS65
100WQ70-17-7.5W(I)	100	70	17	2940	7.5	380	14.3	33	100	855	590	316	351	165.5	TOS100
150WQ140-10-7.5W(I)	150	140	10	2940	7.5	380	14.3	35	120	890	620	383	390	172.5	TOS150
150WQ140-14-11W-4(I)	150	140	14	1440	11	380	22.9	52	216	1097	750	535	575	325	TOS150
200WQ210-10-11W-4(I)	200	210	10	1440	11	380	22.9	63	255	1113	760	530	568	320	TO200
150WQ200-16-15W-4(I)	150	200	16	1440	15	380	30.6	57	237	1167	800	535	572	325	TOS150
200WQ300-10-15W-4(I)	200	300	10	1440	15	380	30.6	64	260	1184	810	535	546	320	TO200

Performance curve

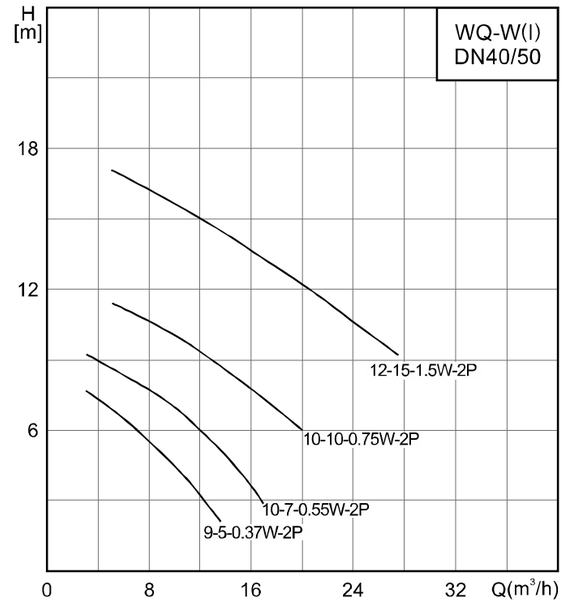

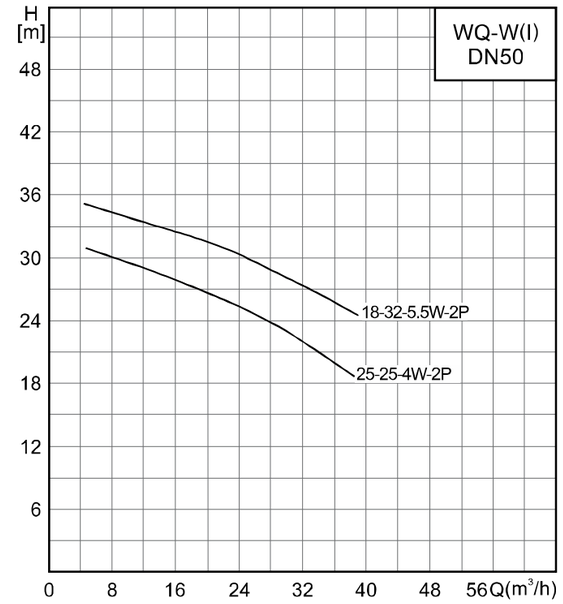

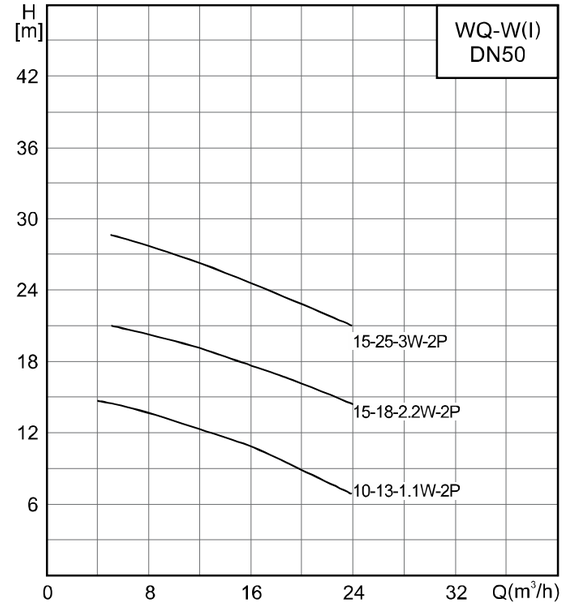

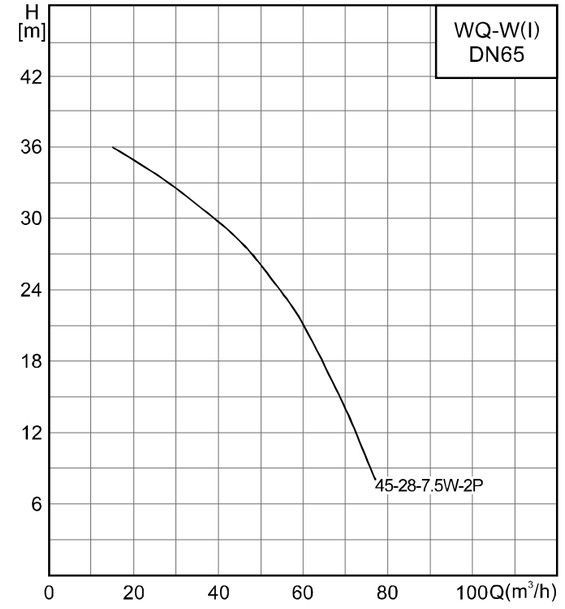

Performance curve

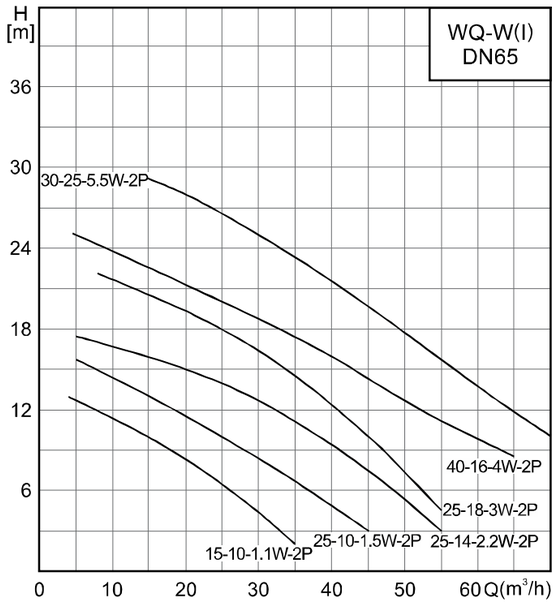

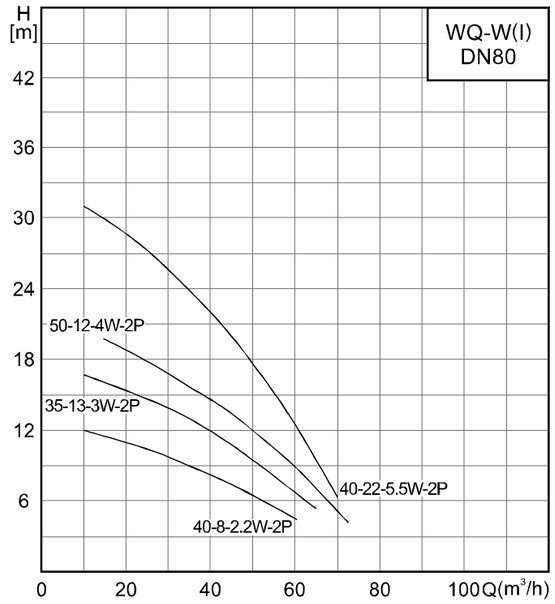

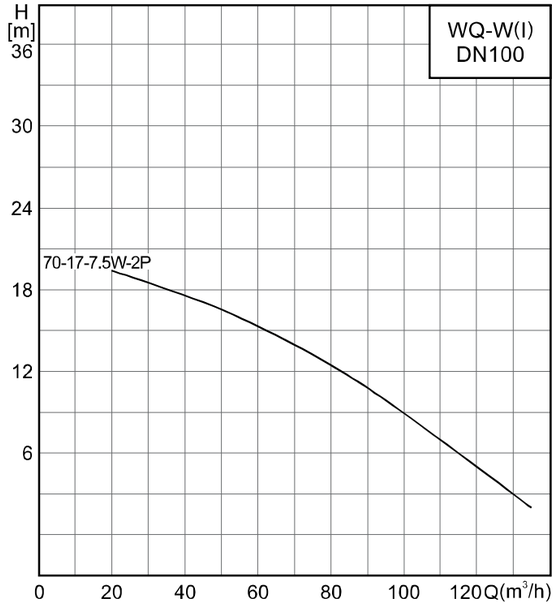

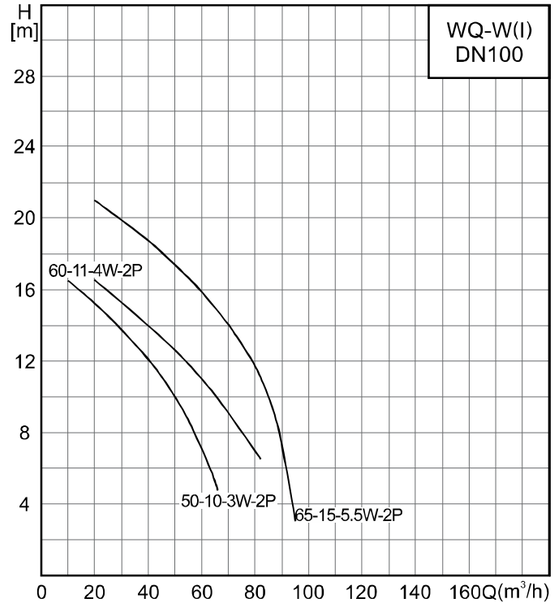

Performance curve

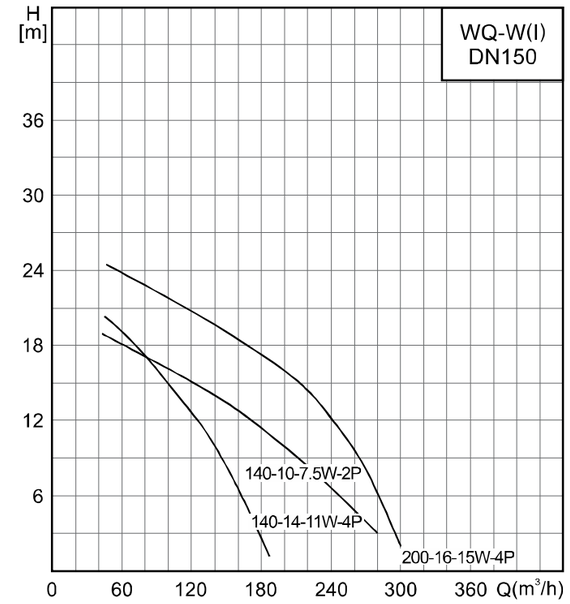

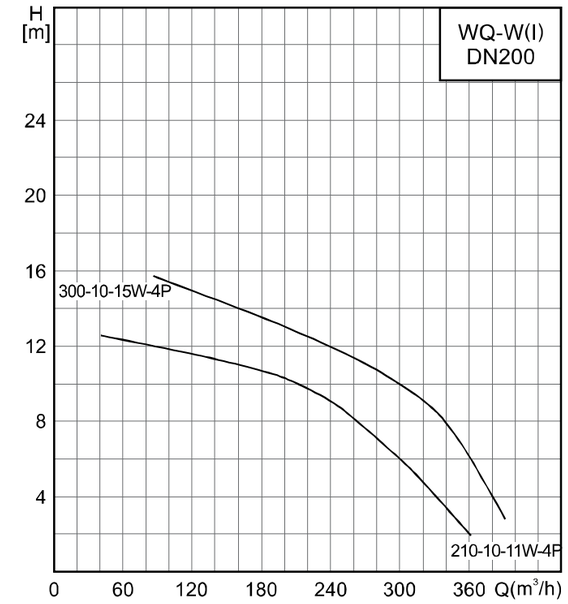

WQ-X(I) series vortex type submersible sewage pump

2-pole motor vortex pump

WQ-X(I) 0.75kW~1.5kW

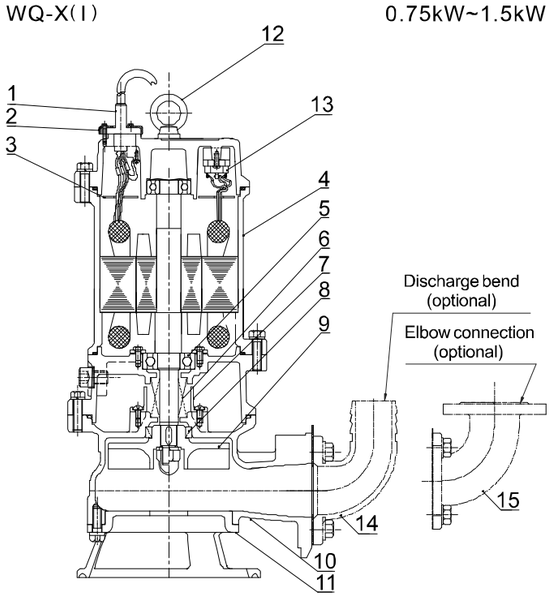

WQ-X(I) 2.2kW~4kW

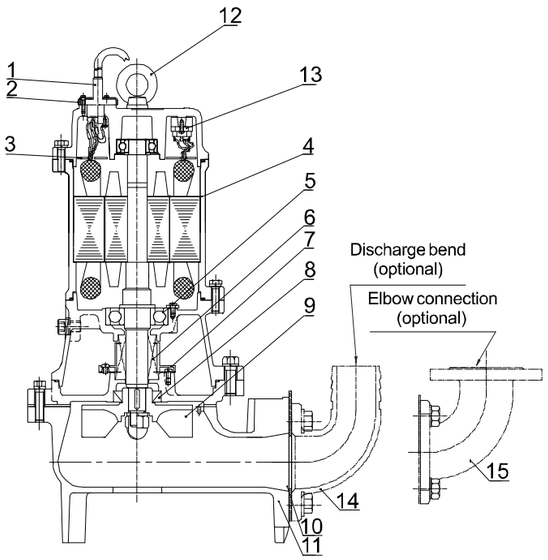

No.	Name	Material
1	Cable	YZW
2	Cable gland	/
3	Threading board	/
4	Base	HT200
5	Bearing	/
6	Mechanical seal	Graphite/SIC SIC/SIC+C
7	Oil lifter	/
8	Oil seal	NBR1-2
9	Impeller	HT200
10	Casing	HT200
11	Suction cover	HT200
12	Eye-bolt	/
13	Thermal protector	/
14	Discharge bend (optional)	HT200
15	Elbow connection (optional)	HT200

The water pump adopts a swirling impeller structure, and the impeller is in the upper part of the pump body flow passage, so that it has good passability, avoiding blockage of the internal flow passage. So it's suitable for working condition in which liquid contains large particles and where conventional water pump is blocked.

Technical data and dimensions

WQ-X(I) vortex type submersible sewage pump

Model	Dia.	Q	Speed	Power	Rated voltage	Rated current	Max.Dia. of passing solid	Weight	Dimensions(mm)					Coupling
	(mm)	(m^3/h)	(m)	(rpm)	(kW)	(A)	(mm)	(kg)	H	H1	H2	F	H3	
50WQX10-8-0.75(I)	50	10	8	2850	0.75	1.8	37	23	432	287	177	215	77	TOS50
50WQX12-10-1.5(I)	50	12	10	2880	1.5	3.3	36	31	468	317	182	250	82	TOS50
65WQX25-9-1.5(I)	65	25	9	2880	1.5	3.3	47	36	490	340	207	250	87	TOS65
80WQX35-9-2.2(I)	80	35	9	2880	2.2	4.6	56	50	545	390	227	275	90	TOS80
80WQX50-12-4(I)	80	50	12	2840	4	7.7	56	58	575	415	230	280	90	TOS80

Performance curve

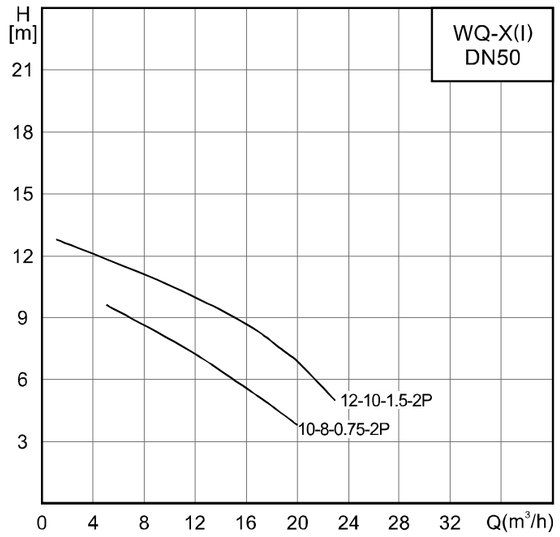

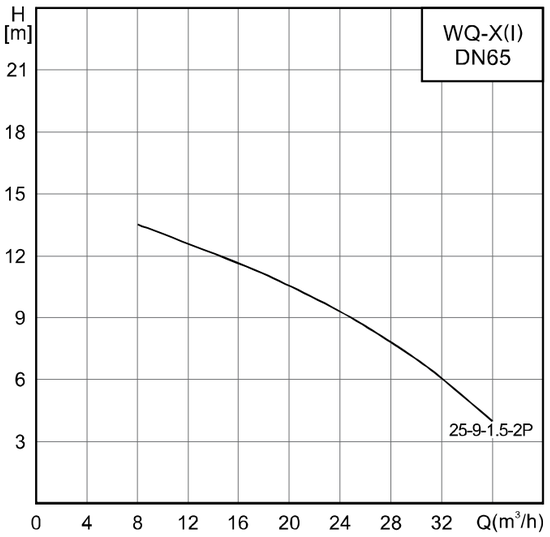

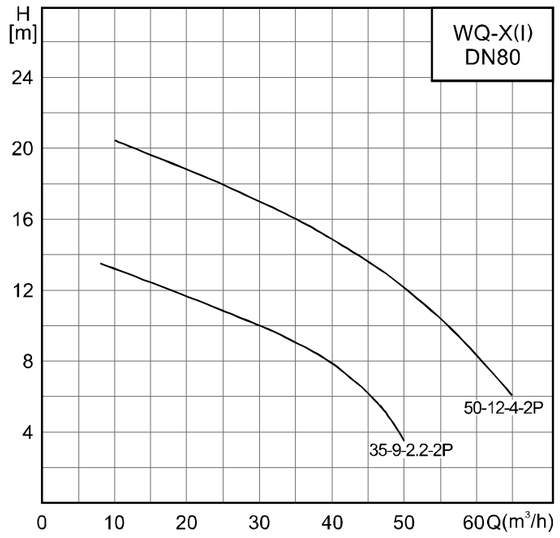

WQ-H(I) high head large solid passing submersible pump

4-pole motor high head pump

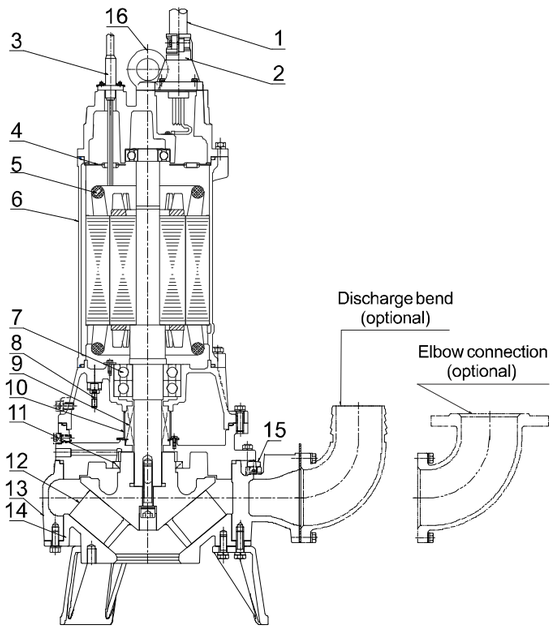

No.	Name	Material
1	Main cable	YZW
2	Cable gland	/
3	Deputy cable	YZW
4	Threading board	/
5	Thermal protector	/
6	Base	HT200
7	Bearing	/
8	Leakage protector	/
9	Mechanical seal	Graphite/SIC SIC/SIC+C
10	Oil lifter	Resin/Others
11	Oil seal	NBR
12	Impeller	HT200
13	Pump body	HT200
14	Suction cover	HT200
15	Automatic air release valve	Resin/Others
16	Eye-bolt	/

The specially designed impeller makes the pump have a higher lift and passability, and the performance is improved by 20%. The impeller used is a semi-open impeller, which has a good function of preventing clogging.

Technical data and dimensions

Model	Dia.	Q	H	Speed	Power	Rated voltage	Rated current	Max.Dia. of passing solid	Weight	Dimensions(mm)				Coupling
	(mm)	(m^3/h)	(m)	(rpm)	(kW)	(V)	(A)	(mm)	(kg)	H	H1	H2	F	
80WQ60-28-11H-4(I)	80	60	28	1440	11	380	22.9	45	265	1030	800	330	565	TOS80F
80WQ60-35-15H-4(I)	80	60	35	1440	15	380	30.6	45	265	1030	800	330	565	TOS80F
80WQ60-40-18.5H-4(I)	80	60	40	1460	18.5	380	36.9	45	350	1200	870	330	600	TOS80F
80WQ80-43-22H-4(I)	80	80	43	1460	22	380	43.1	45	350	1200	870	330	600	TOS80F
100WQ100-22-11H-4(I)	100	100	22	1440	11	380	22.9	55	270	1085	850	420	560	TOS100F
100WQ100-29-15H-4(I)	100	100	29	1440	15	380	30.6	55	270	1085	850	420	560	TOS100F
100WQ100-32-18.5H-4(I)	100	100	32	1460	18.5	380	36.9	55	330	1255	950	420	560	TOS100F
100WQ100-34-22H-4(I)	100	100	34	1460	22	380	43.1	55	330	1255	950	420	560	TOS100F

Performance curve

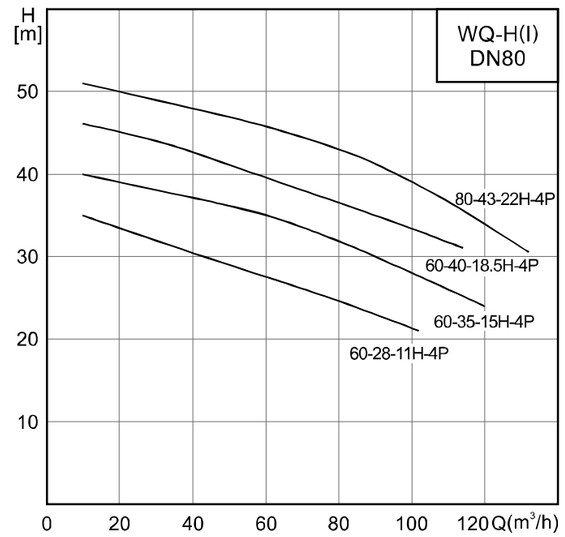

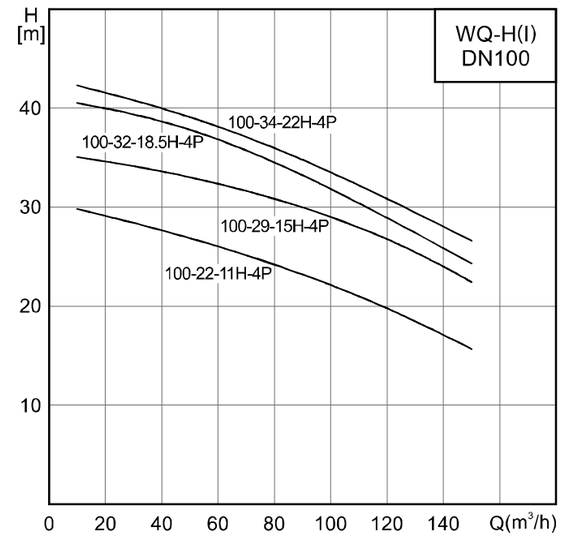

SHP type submersible sewage pump

2-pole motor small-flow high-head pump

22kW~75kW

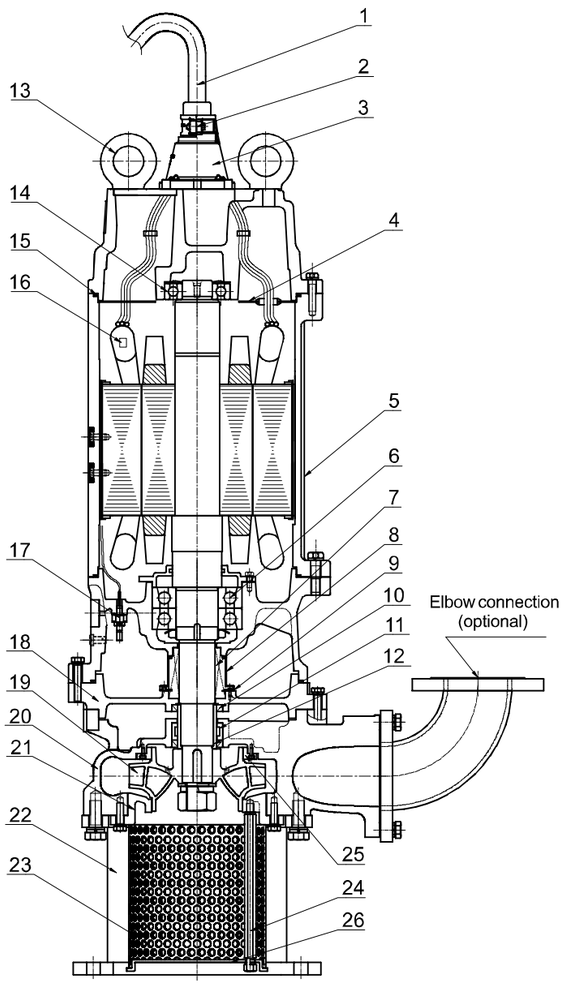

This pump is designed for high-head applications. Equipped with a filtration system, it effectively prevents debris from entering the pump chamber, though with a relatively smaller maximum particle passage size.

No.	Name	Material
1	Cable	YCW
2	Compression gland locking piece	HT200
3	Cable gland	HT200
4	Threading board	Q235
5	Motor	-
6	Lower bearing	NSK Angular Contact Ball Bearing (Imported)
7	Mechanical seal	Burgmann Japan
8	Oil lifter	-
9	Seal gland	Q235
10	Skeleton seal ring	NBR
11	U-shaped shaft sleeve	2Cr13
12	Shaft sleeve	2Cr13
13	Eye-bolt	20#steel
14	Upper bearing	NSK Deep Groove Ball Bearing (Imported)
15	O-ring	NBR
16	Micro thermal protector	-
17	Tsurumi immersion electrode	-
18	Pump upper cover	HT200
19	Impeller	SUS304
20	Pump body	QT600
21	Inlet cover	QT600
22	Foot bracket	Q235
23	Strainer	SUS304
24	Double-ended bolt	SUS304
25	Upper wear ring	SUS304
26	Base plate	SUS304

* Note: Models with 22kW-37kW power ratings do not include an "upper wear ring".

Technical data and dimensions

Model	Dia.	Q	H	Speed	Power	Rated voltage	Rated current	Max.Dia. of passing solid	Weight	Dimensions(mm)						Coupling
	(mm)	(m^3/h)	(m)	(rpm)	(kW)	(V)	(A)	(mm)	(kg)	H	H1	H2	F	F1	H3	
65SHP60-53-22	65	60	53	2955	22	380	41.4	12	283	1450	896	355	465	640	250	TOS-65H
65SHP60-70-30	65	60	70	2965	30	380	54.9	12	305	1450	896	355	465	640	250	TOS-65H
65SHP60-82-37	65	60	82	2965	37	380	67.1	12	322	1450	896	355	465	640	250	TOS-65H
100SHP150-55-45	100	150	55	2965	45	380	82.5	12	425	1650	1072	497	528	751	332	TOS-100H
100SHP150-68-55	100	150	68	2965	55	380	99.5	12	455	1650	1072	497	528	751	332	TOS-100H
100SHP150-79-75	100	150	79	2970	75	380	133.8	12	525	1720	1142	497	528	751	332	TOS-100H

Note: This series complies to Q/HHN 003-2024 enterprise standard.

Performance curve

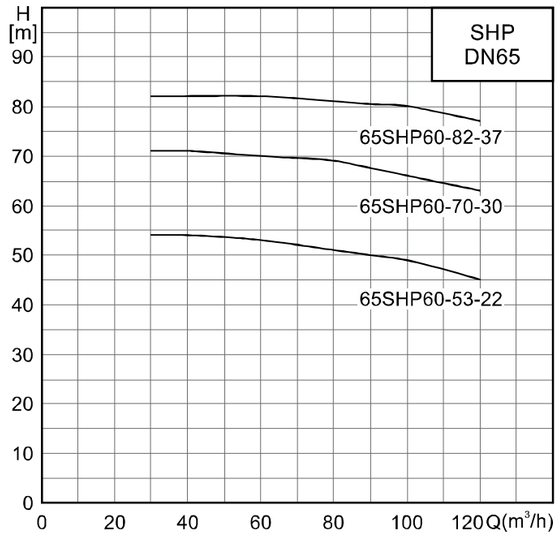

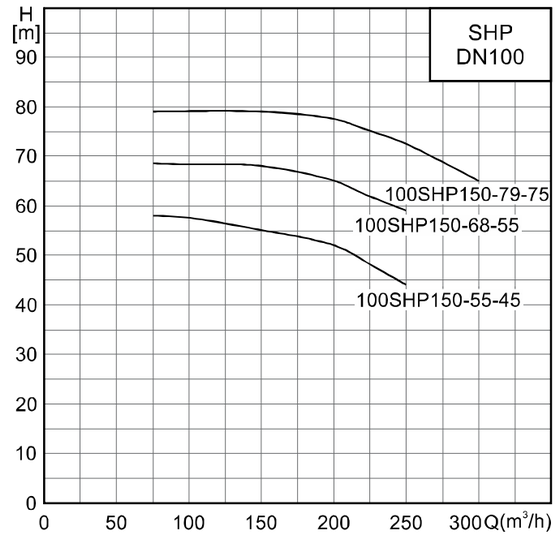

Coupling installation and pump outlet flange dimension

(fit for 2P small-flow high-head pump)

Measure:mm

No.	Diameter	Flange connection size				Coupling base dimension(mm)						L	L1	L2	L3	L4	L5
		D	D1	n1×d1	n1×Md	A	B	B1	B2	B3	n2×d2						
1	DN65 (TOS-65H)	185	145	4-Ø19	4-M16	220	250	170	170	2-Ø14	4-Ø18	580	85	195	230	155	55
2	DN100 (TOS-100H)	220	180	8-Ø19	8-M16	250	290	200	200	2-Ø15	4-Ø18	670	135	245	300	161	70

For small-flow high-head pumps, foot-mounted coupling installation is adopted, with all flanges rated for 10kg pressure class.

Relevant dimensions

Measure: mm(except for inch)

Item \ Diameter	DN65 (TOS-65H)	DN100 (TOS-100H)
Guide pipe size Tap water pipe/seamless steel pipe	1-1/4"/42×3.0 DN32	2"/60×3.25 DN50
Guide rod length	pool depth-271	pool depth-327
Quantity of expansion bolt and specification	2-M10×120	2-M12×125
Quantity of bolt and specification	4-M16×250	4-M16×250
Footer bolt hole size	80×80×300	80×80×300
Dia.of soft pipe(using scope)	DN65	DN100

Installation methods of small-flow high-head pump

Installation methods of small-flow high-head pump

Fixed Automatic Coupling Installation Diagram

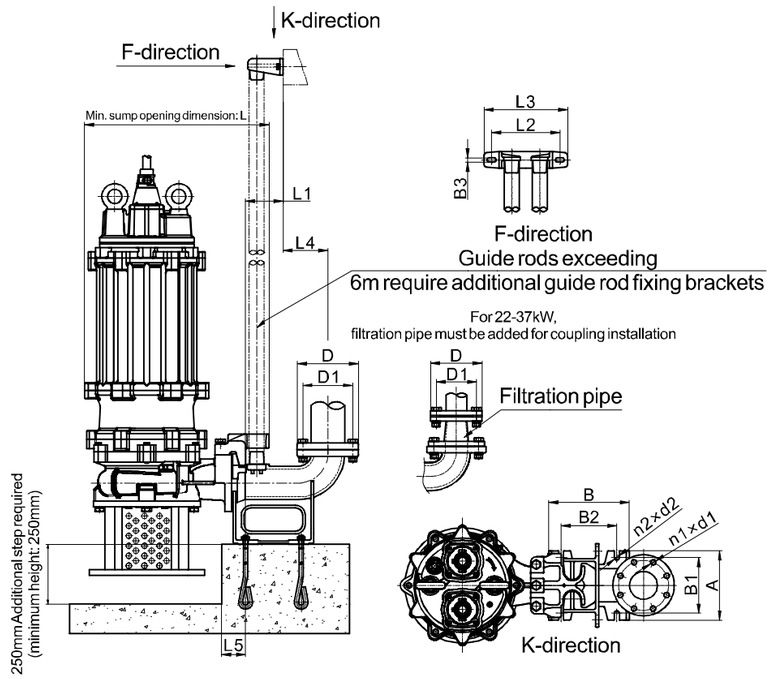

Mobile Installation Diagram

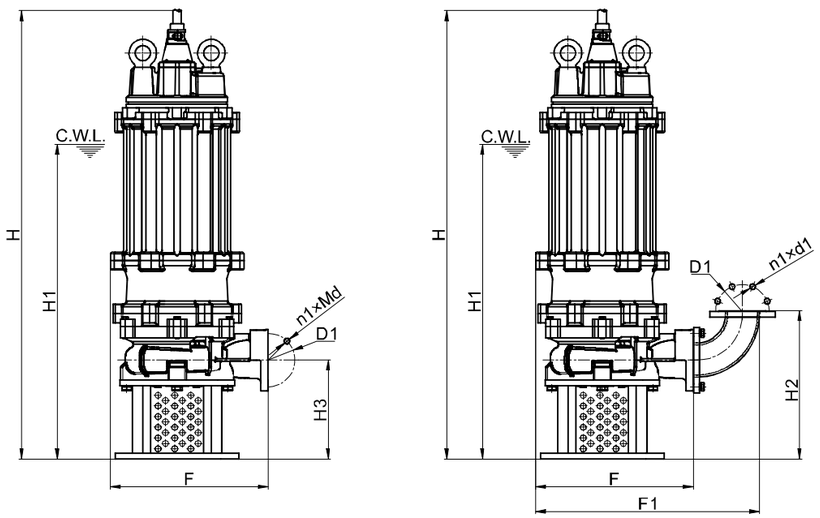

Rigid Pipe Mobile Type

Rigid pipe with elbow fittings Mobile Type

*C.W.L: Min. operating water level for continuous operation

Table of pump models and oil capacities

Pump model and power	Oil capacity(mL)	Remark	Pump model and power	Oil capacity(mL)	Remark
2P-0.37kW	320		4P-2.2kW	1300	
2P-0.55/0.75/1.1kW	500	Fit for these model: 40/50WQ15-8-1.1(I) 40/50WQ15-13-1.1(I) 50WQ10-15-1.1QG(I) 50WQ15-12-1.1QG(I) 40/50WQ15-13-1.1JY(I) 40/50WQ15-8-1.1JY(I)	4P-4kW	1200	
2P-1.1kW	670		4P-5.5kW	4200	
2P-1.5kW	940		4P-7.5kW	4500	
2P-2.2kW	1160		4P-11kW	5200	
2P-3kW	1100		4P-15kW	5100	
2P-4kW	1300		4P-18.5/22kW	4600	
2P-5.5kW	2140		4P-30kW	8600	
2P-7.5/11/15kW	2000		4P-37/45kW	9100	
2P-22/30/37kW	4800		4P-55/75kW	9600	
2P-45/55/75KW	8300		4/6P-90-150kW	25000	
6P-22/30/37kW	9100				
6P-45/55/75kW	14000				
8P-22kW	9100				

Summary(NH Series)

NH series control cabinets have the protection function of overload, short circuit and over current. With the working mode of single pump and multiple pump control, switching mode of main pump and stand-by pump, and various starting mode, they can apply to automatic control of water supply and drainage of agricultural production and buildings, fire control and spray network pressure boost.

With fine appearance, convenient installation and good quality, NH series electric control cabinets are reliable partner of all kinds of pumps.

Product features

1. Can be used in all kinds of situation like domestic sewage disposal.
2. Equipped with domestic and international famous brand and excellent cabinet body, well-designed, good in quality.
3. Combination by arbitrary selection, the product has various starting mode, control mode and switching mode.
4. Good service. Provide pre-sales consulting and after-sales service timely.

Operation condition and installation condition

1. Altitude shall not above 2000m, ambient temperature shall not above 45℃ and less than -5℃, air relative humility shall not more than 90%(if the temperature is 25℃).
2. No water drop, steam, afloat dust, metal particle, direct sunlight, high temperature, dust fall, corrosive gas, flammable gas or liquid.
3. No significant shake, shock and vibration.
4. Sweep condensation on product's surface which caused by temperature variation.
5. Vertical installation.

Power requirement

Power inlet: Three-phase-five-wire system

Power: 50HZ, 3PH380V

Definition of model

NH — Q — Z — 1 — 5.5

- 5.5: Power of controlled motor
- 1: Quantity of controlled pump
- Z: Control mode (Z-direct starting/B-inverter/R-Soft starting/SJ-Star delta starting)
- Q: Manufacturer code
- NH: CNP electronic control cabinet

Supply range

Installation method	Complete supply parts	Optional part		Spare parts
Mobile hose installation	Main pump, hose connector	Hose	Electric control cabinet, terminal box, chain cable (for lifting), dirt suction grid (customized), hoist (custom), rectangular gate (customized)	Impeller/Sealing ring/ Bearing/ Mechanical seal
Mobile pipe installation	Main pump, flanges	Double flange joints		
Automatic coupling installation	Main pump, automatic coupling device	Guide tube, anchor bolt, expansion bolt		

Ordering Instructions

1. Please indicate product model, name, performance parameters (flow rate, head), installation method, options, spare parts, etc. when ordering. Influence of medium weight on power, effects and requirements of medium corrosivity and friction on over-current seals, should be taken into consideration when selecting the model.
2. Special requirements for safety protection inside the pump (oil-water probe, water inlet probe, thermal element, etc.) must be stated or indicated when ordering. Control method and automation requirements should be indicated when the electric control cabinet is ordered as well.
3. Standard configuration cable length is 9meters, please start from 15meters (increase by multiple 5 meters), if you need other lengths.
4. Please indicate stat mode of the pump when ordering. The standard form is: direct starting for 37kW and below, star delta starting for 45kW and above. The direct starting model draws UVW from the inside of the pump, and the star-delta model draws U1V1W1, U2V2W2 from the inside of the pump.
5. 11kW and above are recommended to use the inverter, auto-coupling or soft starter to start the pump when the star-delta startup is not used.
6. The pressure level of the water pump outlet is PN6.